Installation Instructions

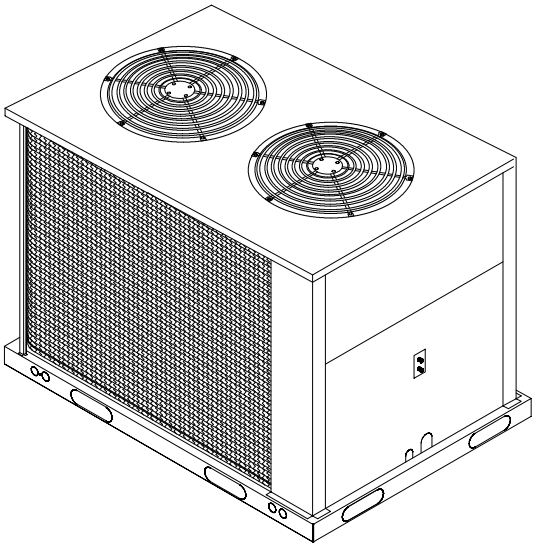

CAC / ACC Series
12-1/2 to 20 Ton

Commercial Split Condensers

Printed in U.S.A.

501 01 1201 01 7-22-98
LP1

SAFE INSTALLATION REQUIREMENTS

WARNING

Installation or repairs made by unqualified persons can result in hazards to you and others. Installation MUST conform with local building codes or, in the absence of local codes, with the the National Electrical Code NFPA 70/ANSI C1-1993 or current edition and Canadian Electrical Code Part 1 CSA C.22.1.

The information contained in this manual is intended for use by a qualified service technician familiar with safety procedures and equipped with the proper tools and test instruments.

Failure to carefully read and follow all instructions in this manual can result in equipment malfunction, property damage, personal injury and/or death.

CAUTION: Improper installation, adjustment, alteration, service or maintenance can void the warranty.

The weight of the condensing unit requires caution and proper handling procedures when lifting or moving to avoid personal injury. Use care to avoid contact with sharp or pointed edges.

Safety Precautions

1. Always wear safety eye wear and work gloves when installing equipment.
2. Never assume electrical power is disconnected. Check with meter and disconnect.
3. Keep hands out of fan areas when power is connected to equipment.
4. R-22 causes frost-bite burns.
5. R-22 is toxic when burned.

NOTE TO INSTALLING DEALER: The Owners Instructions and Warranty are to be given to the owner or prominently displayed near the indoor Air Handler Unit.

Before Installation

Inspect the unit for damage before installing. Check the unit rating plate for correct model number and voltage requirements of job site before installation.

Foundation Construction

Zoning ordinances may govern the minimum distance the condensing unit can be installed from the property line. Check before proceeding.

The remote condensing unit is to be installed on a solid foundation. This foundation should extend a minimum of 2" beyond the sides of the condensing unit and must be level.

This foundation can be a precast slab. It can also be a monolithic poured slab. To eliminate the possibility of noise transmission, the foundation slab should NOT be in contact with or be an integral part of the building foundation.

NOTE: At no time should the condensing unit be set on bricks or concrete blocks.

Condensing Unit Location

These units are designed with "top discharge" condenser air movement. The condenser air is taken in through the condenser coil and is discharged out the top.

For quiet operation and maximum efficiency, eliminate any obstructions which might interfere with air discharge.

After making allowances for zoning ordinances, care should be exercised not to locate the condensing unit immediately adjacent to sleeping areas or in corners where operating noise levels can be amplified. Select a location as reasonably close to the indoor unit as possible to avoid any long refrigeration line runs. Place the unit so there is a minimum of 24" between the building and the service panel of the unit to allow for service.

Ensure there is a minimum of 12" between the coil inlet and the building wall, other structure or shrubs.

CAUTION: DO NOT install unit below an overhang that does not have guttering. A minimum vertical clearance of 60" is required to overhang.

Roof Top Installations

If it is necessary to install units on a roof structure, be sure to elevate and level the units. Ensure the roof structure and anchoring method are adequate for unit location. Consult local codes regarding rooftop mounting.

NOTE: When condensing unit is to be installed on a bonded guaranteed roof, a release must be obtained from the building owner to free the installer from all liabilities.

Hoisting

CAUTION

When hoisting unit, at least two slings and two spreader bars MUST be used to prevent damage to unit.

NOTE: All access panels **MUST** be secured in place before hoisting.

The unit should be hoisted with two lifting slings. Attach the slings to rigging shackles that have been hooked through holes in the base rail.

Two spreader bars **MUST** be placed on top of the unit to protect the unit from damage from the pressure exerted by the slings. Make sure that all equipment is adequate to handle the weight of the unit and that the slings will not allow the unit to shift.

Figure 1

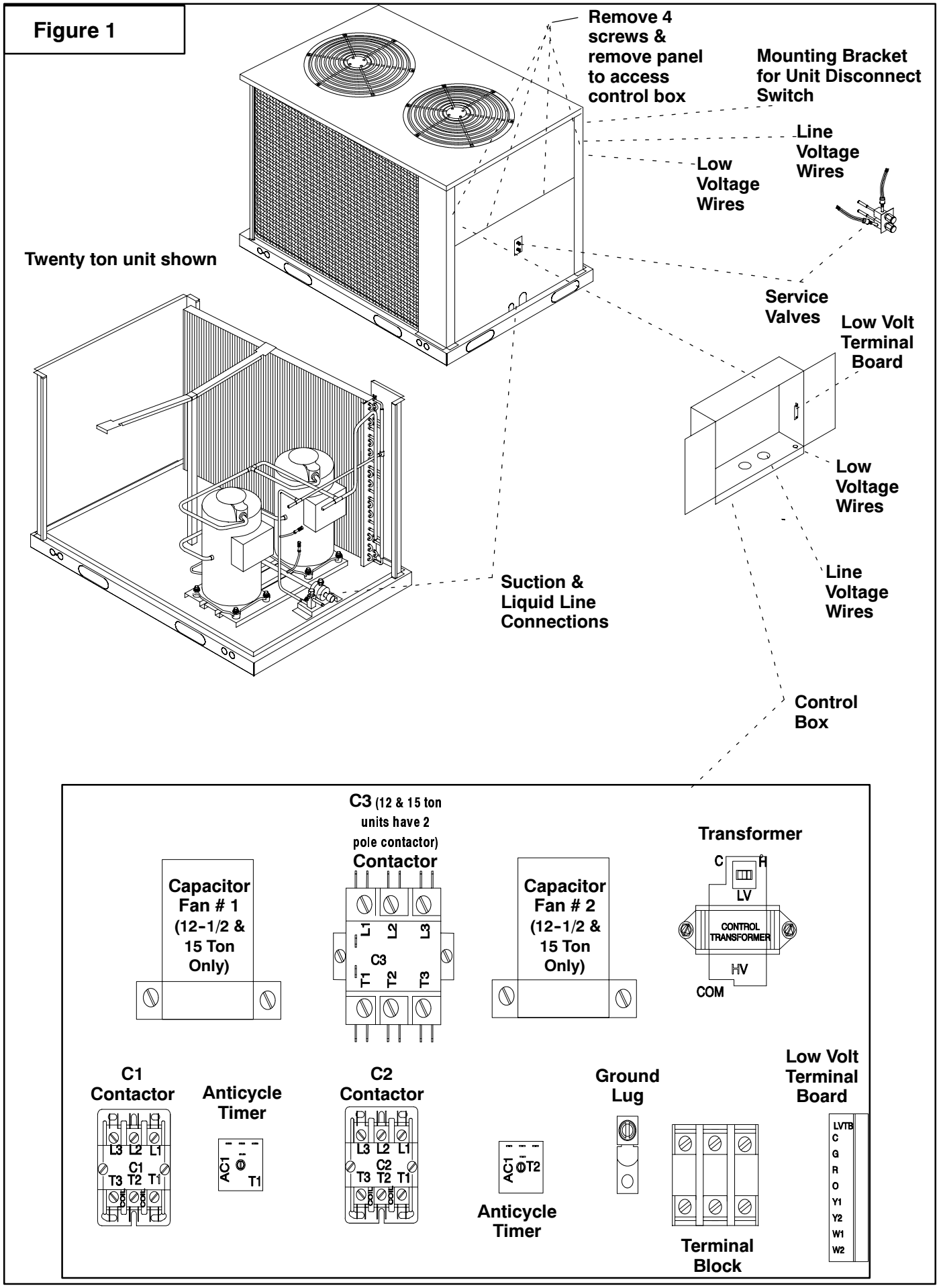
Remove 4 screws & remove panel to access control box
Mounting Bracket for Unit Disconnect Switch
Line Voltage Wires
Low Voltage Wires
Twenty ton unit shown
Service Valves
Low Volt Terminal Board
Low Voltage Wires
Line Voltage Wires
Suction & Liquid Line Connections
Control Box
C3 (12 & 15 ton units have 2 pole contactor) Contactor
Capacitor Fan # 1 (12-1/2 & 15 Ton Only)
L1 L2 L3
C3
T1 T2 T3
Capacitor Fan # 2 (12-1/2 & 15 Ton Only)
Transformer
C H
LV
CONTROL TRANSFORMER
HV
COM
C1 Contactor
L3 L2 L1
C1
T3 T2 T1
Anticycle Timer
AC1
T1
C2 Contactor
L3 L2 L1
C2
T3 T2 T1
AC1
T2
Anticycle Timer
Ground Lug
Terminal Block
Low Volt Terminal Board
LVTB
C
G
R
O
Y1
Y2
W1
W2

Refrigerant Piping

NOTE: All refrigerant piping MUST comply with applicable local, state and national safety codes. Use only refrigeration grade copper tubing Type K or L which is internally clean and damage free.

General NOTES:

Run refrigerant lines should be installed so as to prevent excessive vibration and strains at joints and connections. Lines shall be securely fastened to a permanent support within 6 feet following the first bend from the compressor, and within 2 feet of each other bend or angle. Lines should be supported at points not more than 15 feet apart. Lines should be installed so that it is not subject to damage from an external source.

Vertical separation of indoor and outdoor sections MUST NOT exceed 60' (18.3m).

Refrigerant lines MUST NOT exceed the lengths specified in **Figure 2.** Contact place of purchase for recommended procedures if either of the line lengths are too short for a particular site.

Figure 2	**Recommended Line Sizes (Max. Equivalent Feet of Copper Tubing, Type L or K)**			
Unit Size (Ton)	Suction Line Size O.D. Copper		Liquid Line Size O.D. Copper	
	1-3/8"	1-5/8"	5/8"	7/8"
12-1/2	70'	160'	35'	200'
15	35'	80'	16'	100'
20	-	50'	-	60'
Equilvalent line lengths in the above table are suitable for a unit operating at 40°F sat. suction, 50°F return gas and 95°F ambient.				

Design

NOTE: Piping design is the most important step in ensuring trouble free operation with maximum performance.

Properly design piping to achieve maximum system capacity with minimum installation costs and minimum refrigerant charges while providing proper refrigerant control. This will provide maximum system load flexibility without compressor lubrication and temperature problems and provide minimum power consumption due to efficient compressor operation.

Oil Trapping

Horizontal Suction Lines

Pitch horizontal suction lines downward in the direction of refrigerant flow in cooling mode to aid in oil drainage. Downward pitch MUST be at least 1/2" per 10'.

If indoor coil is above the outdoor unit, pitch horizontal runs down to the outdoor section.

Vertical Suction Risers

It is recommended that vertical suction risers not be upsized. Proper oil return to the compressor should be maintained with suction gas velocity. If velocities drop below 1500 fpm (feet per minute), oil return will be decreased. An oil trap should be installed every 20' of vertical suction line riser (condenser above evaporator.) Refer to line sizing charts.

Line Valves

The outdoor condensing unit is supplied with straight sweat brass service valves.

All line valves are positioned to seal the refrigerant in the condensing unit with gauge ports open to connecting lines when the Schraeder valve is depressed. Gauge ports have Schraeder installed and require use of charging hoses with depressors. Do not heat valve body above 250 degrees F.

Brazing Connections

WARNING

Fire Hazard

Refrigerant and oil mixture under pressure could ignite as it escapes and contacts brazing torch resulting in Fire. Make sure the refrigerant charge is properly removed from both the high and low sides of the system before brazing any component or lines.

FAILURE TO DO SO COULD RESULT IN BODILY INJURY OR DEATH.

Before making braze connections, be sure all joints are clean. Before heat is applied for brazing, nitrogen should be flowing through the tubing to prevent oxidation and scale formation on the inside of the tubing.

Liquid & Suction Lines

Fully annealed refrigeration lines should be used when installing the system.

The coil may also be checked for leaks using pressure and/or halide torch or electronic leak detector.

The following is the recommended method for making braze connections at the refrigerant line connections:

1. Clean refrigerant tube end with emery cloth or steel brush.
2. Use a suitable brazing alloy for copper to copper joints.
3. Insert tubing into swage fitting connection.
4. Apply heat absorbing paste or heat sink product to prevent damage to the service valve.
5. Braze joint.
6. Quench the joint and tubing with water using a wet rag. Leave rag on fitting body and re-wet with water to help cool area.

Evacuating, Charging, and Leak Testing

NOTE

Intentional release of CFC or HCFC Refrigerant to the Atmosphere violates Federal Law. It may also violate State and Local Codes. Check all Federal, State and Local Codes before proceeding.

Correct evacuation and charge are vital for proper performance and compressor life.

NOTE: Do not use any portion of the charge for purging or leak testing. It is mandatory that a thorough evacuation of the refrigerant in the piping and evaporator be performed.

The liquid line and suction line service valves have been closed after final testing at the factory. **Do not disturb these valves until the lines have been leak checked and evacuated or the charge in the unit may be lost.**

The unit is shipped with a 10 oz. R-22 holding charge to allow installation of interconnecting lines without purging the unit prior to charging the system.

1. Remove access caps from service valve ports.
2. Attach manifold gauge hoses to liquid and suction gage ports.
3. Pressurize system to 40-50 psig and leak test all connections. Use an Electronic Leak Detector, a halide Torch or coat the connections with liquid detergent. If using detergent watch for a constant forming of bubbles. They indicate a leak. If a leak is found, check the connections for tightness or re-braze.
4. Connect vacuum pump to manifold gauge set and evacuate to 500 microns vacuum through both sides of the line set. All leaks must be repaired.
5. Close valve to vacuum pump and shut off vacuum pump. When system is balanced (3 minutes) and gauge doesn't go above 500 microns, close all gauge valves.
6. Open the liquid and suction valves. Add proper amount of refrigerant.
7. Re-install access caps on service valves.
8. Re-install gauge port caps and check for leaks. Tighten valve core and the gauge port caps if leak is found. (Over-tightening valve core or caps will damage the gauge ports.)

Valve Actuation: Service Valves

A) After evacuation of the connecting lines, remove the service valve cap and fully insert the hex wrench into the stem. A back-up wrench is required on the valve body to open the valve stem (not required on ball valves.) Backout counterclockwise until the valve stem just touches the retaining ring. NOTE: THIS IS NOT A BACKSEATING VALVE. Care must be taken to prevent dislodging retainer ring when opening valve. Some models have ball type suction valves that can be opened with a 6" crescent wrench by rotating the valve stem 90° counter clockwise.

B) Replace service valve cap and torque to; 12-16 ft. lbs. on 5/8", and 15-21 ft. lbs on 7/8" valves, 6-8 ft. lbs. on ball valves.

NOTE: The cap is the primary seal and must be tightened to prevent leaks.

C) Torque gauge port cap 6-8 ft. lbs.

REFRIGERATION PIPING & CHARGING

The recommended method of addition or removal of refrigerant is by weight.

For oil requirements, add 1 oz. of oil for every 100 feet of line set over 100 feet. For piping lengths up to 50 feet refer to **Figure 3** for pipe size, and **Figure 4** for refrigerant adjustment.

On applications where liquid floodback to the compressor is likely to occur, use of a suction line accumulator is recommended.

Figure 3 - LINE SIZING (Up to 50' length line sets)

Model Size - Ton	Liquid	Suction
12-1/2	5/8"	1-3/8"
15	5/8"	1-3/8"
20	7/8"	1-5/8"

Figure 4 - Addition of Refrigeration Charge

Liquid Line Diameter	oz. Per Linear Ft.
5/8	1.9
7/8	3.25

Electrical Connections

WARNING

Electrical shock hazard.

Turn OFF electric power at fuse box or service panel before making any electrical connections and ensure a proper ground connection is made before connecting line voltage.

Failure to do so can result in property damage, personal injury and/or death.

Be sure to check all Local Codes to determine that the unit is installed in accordance with Local requirements. Consult the National Electric Code for wire size requirements.

Line voltage connections are made at the line side of the terminal block in the electrical box of the condensing unit. **See Figure 1.** The unit should be wired through a properly sized fused disconnect switch. Provisions have been made on the side of the unit for mounting a disconnect box. Follow the appropriate wiring diagram attached to the inside of the access door of the condensing unit.

Proper fusing recommendations are also indicated on the Unit Rating Plate. However, in general, the best fuse for any unit is the smallest fuse that will hold the equipment on the line under normal use and service without nuisance tripping breakers or blowing of fuses. Time-delay fuses such as fusetron, or fusestat are recommended to prevent blowing due to starting current (the current in-rush when the equipment starts is referred to as the Locked Rotor Amps or LRA). A fuse of this kind sized properly, will give maximum equipment protection. Use 60°C wire or higher.

NOTE: Three Phase Units - If the units are wired incorrectly, they will try to run backwards. The compressor will make a loud bang when started and then shut down if the phase is wrong on the wiring.

Ground Connections

A ground lug is installed on the electrical control panel **(See Figure 1)**. Run a copper conductor of the appropriate size from the ground lug to a grounded connection in the electrical service panel. Check all ground connections to ensure that they are tight.

Line Voltage Wiring

Do NOT complete line voltage connections until unit is permanently grounded. All line voltage connections and the ground connection MUST be made with copper wire.

Line Voltage Connections

Line voltage wires enter the unit through the knockout located on the right front of the unit just under the disconnect box mounting bracket and then enter the bottom of the control box. **See Figure 1.** Complete the line service connections to the terminal block in the electrical control box. For access, remove the control box panel (**See Figure 1**). Refer to the wiring diagram for connection information.

Low Voltage Connections

Low voltage wiring connections for the thermostat enter the unit at the right front just under the disconnect box mounting bracket. Remove the temporary plug and install thermostat wire with appropriate strain relief. Thermostat connections are made at the low voltage terminal board (**See Figure 1**) in the control box. Refer to the wiring diagram and instructions included with the thermostat.

Indoor Coil

Make connections to indoor blower coil. Refer to Indoor Coil manual for additional information.

Wiring Check

After wiring is completed, check all electrical connections, including factory wiring, to ensure that all connections are tight. Replace and secure control box access panel before leaving the unit or turning on electric power.

Start-up Procedure

WARNING

Electrical shock hazard.

Turn OFF electric power at fuse box or service panel before making any electrical connections and ensure a proper ground connection is made before connecting line voltage.

Failure to do so can result in property damage, personal injury and/or death.

Cooling Checks

NOTE: Some thermostats may have a time delay or other features that will require changes in the check-out procedure.

1. Ensure that electric power to both indoor and outdoor units is shut OFF.

2. Set thermostat Heat-Cool selector to OFF.

3. Set thermostat fan switch to AUTO.

4. Turn ON electric power to both units. Nothing should start running. If any unusual arcing, odors or noises are encountered, shut OFF electric power immediately and check for wiring errors or obstructions in or near fans and motors.

5. Set thermostat fan switch to ON. The indoor blower should run.

NOTE: Check for proper indoor blower rotation.

6. Set thermostat fan switch to AUTO. The indoor blower should shut OFF.

Allow unit to stay in this mode for at least six hours to allow the crankcase heater to evaporate any liquid refrigerant that is in the compressor oil.

7. Set thermostat above room temperature. Set thermostat Heat-Cool selector switch to COOL. Set thermostat below indicated room temperature. The contactor will close at the condensing unit and the indoor blower should start running.

The compressors and outdoor fans(s) will run. If any unusual arcing, odors or noises are encountered, shut OFF electric power immediately and check for wiring errors or obstructions in or near fans and motors. Check for proper rotation of fan motors. Fans should pull air in through the condensing coil and blow out through the top grills. If motors operate in reverse rotation, line polarity of 3 phase power must be changed.

NOTE: The compressors have a five minute anti-cycle delay that is activated whenever the compressors are shut off. For instance, if the unit is manual shut off when the compressors are running and the unit is turned back on two minutes later, it will be an additional three minutes before the compressors will restart.

8. With the unit operating, close all doors, windows and other openings in the building. Set the thermostat to the desired setting. The unit may run several hours or even a full day to reduce the initial heat and moisture in the building. This is normal for any air conditioning system.

9. After the unit has been operating for an hour or more, check ductwork for sweating. If ductwork is sweating, additional insulation with a vapor barrier is required.

10. Ensure that condensate is draining properly from indoor unit.

Unit Maintenance

The unit should be inspected and cleaned on an annual basis by a qualified technician. This should include checking for adequate clearances, electrical connections, duct connections / blockages, air filters, air flow, lubrication, and operational performance of system. **Coils may require cleaning. The coil should always be cold when cleaning. Use an alkaline based cleaner only. Cleaning a hot coil or using an acid based cleaner will remove the paint from the fins and may clog the coil.**

CORNER WEIGHTS (LBS)

UNIT SIZE (Ton)	A	B	C	D	OPERATING WEIGHT TOTAL
12-1/2	114	114	164	164	555
15	165	165	238	238	807
20	182	182	262	262	888

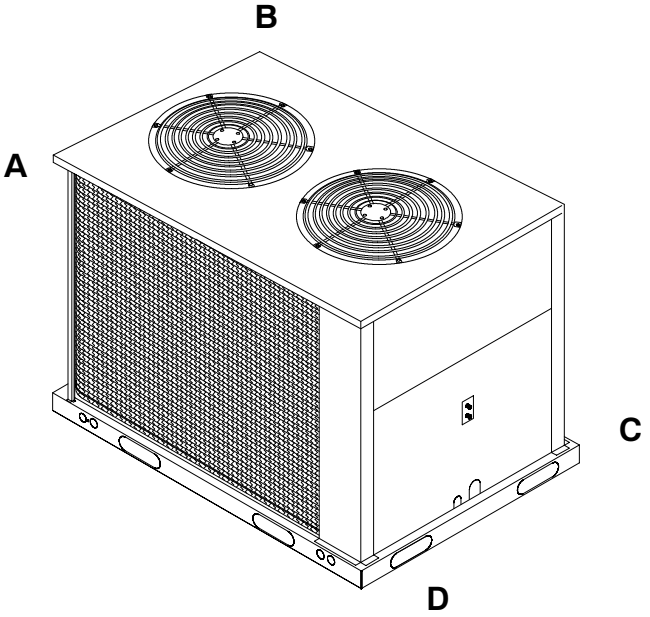

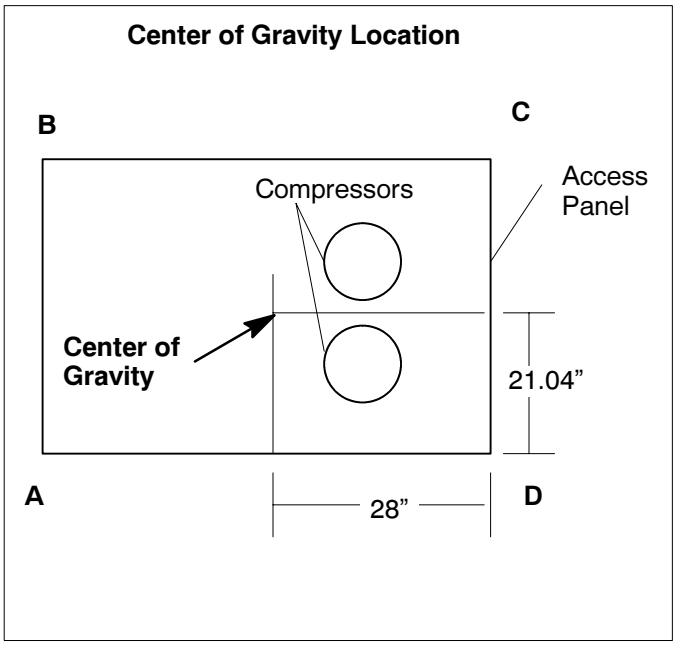

INSTRUCTIONS DE SOULEVAGE

⚠ AVERTISSEMENT

SI CET AVERTISSEMENT N'EST PAS RESPECTÉ, IL PEUT EN RÉSULTER DES DÉGÂTS MATÉRIELS, DES DOMMAGES CORPORELS OU LA MORT.

- TOUS LES PANNEAUX DOIVENT ETRE EN PLACE AU MOMENT DU MONTCHARGE ET SOULEVAGE.
- ACCROCHEZ LES CHAINES DE SOULEVAGE A TRAVERS LES TROUS DE LA BARRE DE BASE, COMME LE MONTRE DETAIL-A.
- UTILISEZ DES PLANCHES D'ÉLARGISSEMENT AU MOMENT DU SOULEVAGE POUR ÉVITER DES DOMMAGES À L'APPAREIL.
- ASSUREZ QUE LE MONTECHARGE ET LES CHAÎNES DE SOULEVAGE SONT SUFFISANT POUR MANOEUVRER LES POIDS ENUMERER.

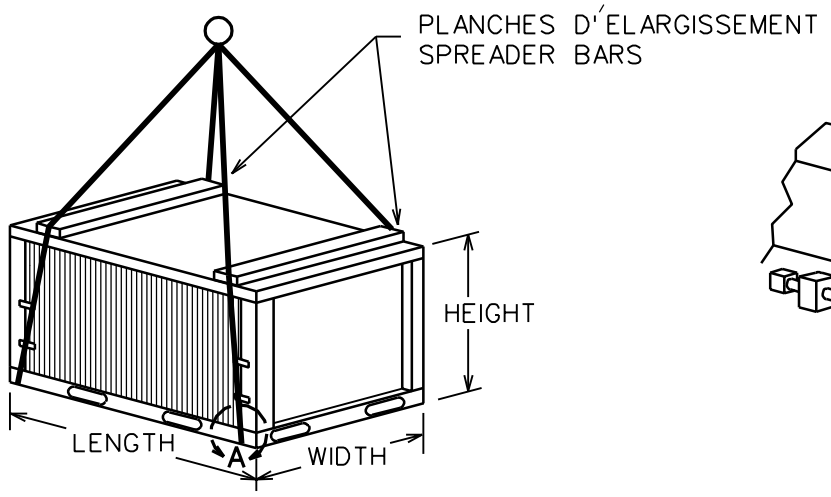

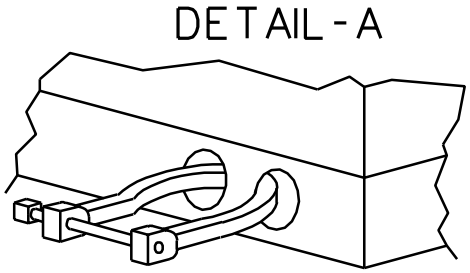

CAPACITY	LENGTH		WIDTH		HEIGHT		POIDS/WEIGHT	
	IN	MM	IN	MM	IN	MM	LB	KG
12.5 TONS	69.00	1753	43.00	1092	49.50	1257	600	273
15 TONS	69.00	1753	43.00	1092	49.50	1257	850	386
20 TONS	69.00	1753	43.00	1092	51.50	1308	950	432

RIGGING INSTRUCTIONS

⚠ WARNING

FAILURE TO FOLLOW THESE INSTRUCTIONS CAN RESULT IN PROPERTY DAMAGE, BODILY INJURY OR DEATH.

- ALL PANELS MUST BE IN PLACE WHEN RIGGING AND LIFTING.
- HOOK RIGGING SHACKLES THROUGH HOLES IN BASE RAIL, AS SHOWN IN DETAIL-A.
- USE SPREADER BARS, WHEN RIGGING, TO PREVENT UNIT DAMAGE.
- BE SURE RIGGING AND SHACKLES ARE SUFFICIENT TO HANDLE WEIGHT LISTED.

1097929