TECHNICAL SUPPORT MANUAL
Builder Series TXV Cased Coils
EBU2X

Safety Labeling and Signal Words

DANGER, WARNING, CAUTION, and NOTE

The signal words **DANGER, WARNING, CAUTION,** and **NOTE** are used to identify levels of hazard seriousness. The signal word **DANGER** is only used on product labels to signify an immediate hazard. The signal words **WARNING, CAUTION,** and **NOTE** will be used on product labels and throughout this manual and other manuals that may apply to the product.

DANGER – Immediate hazards which **will** result in severe personal injury or death.

WARNING – Hazards or unsafe practices which **could** result in severe personal injury or death.

CAUTION – Hazards or unsafe practices which **may** result in minor personal injury or product or property damage.

NOTE – Used to highlight suggestions which **will** result in enhanced installation, reliability, or operation.

Signal Words in Manuals

The signal word **WARNING** is used throughout this manual in the following manner:

⚠ WARNING

The signal word **CAUTION** is used throughout this manual in the following manner:

⚠ CAUTION

Signal Words on Product Labeling

Signal words are used in combination with colors and/or pictures on product labels.

TABLE OF CONTENTS

Exploded Drawing 2
EBU2X Parts List . . . . . 3 – 5
Airflow vs. Static Pressure Chart 6
Model Number Identification 7

⚠ WARNING

ELECTRICAL SHOCK HAZARD

Failure to turn off electric power could result in personal injury or death.

Before installing or servicing system, turn off main power to the system. There may be more than one disconnect switch, including accessory heater(s).

NOTE: This illustration is for reference only. Your unit may differ in appearance or may not include all components shown.

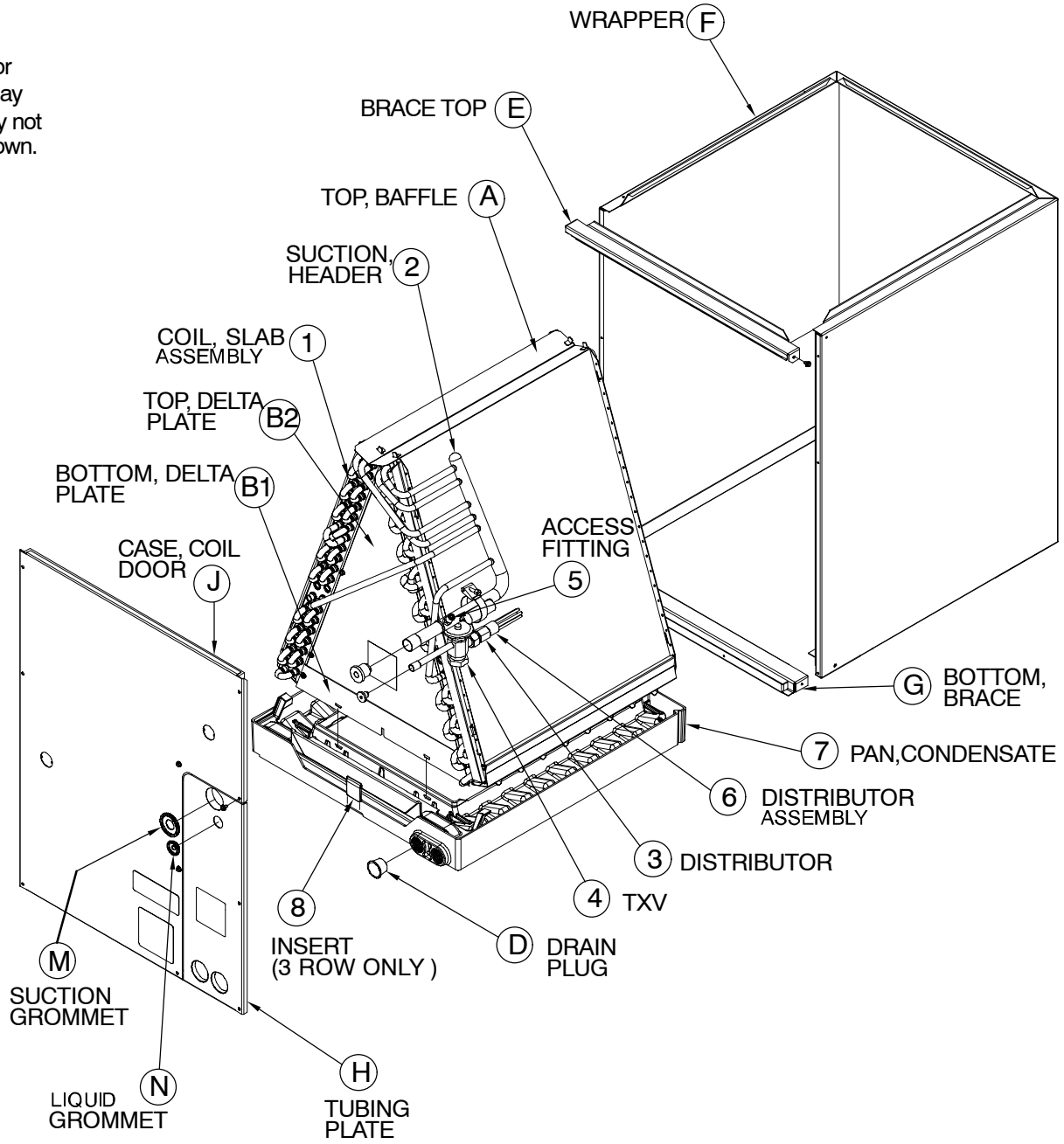

EBU2X

EBU2X18BA1–EBU2X60LA1 SERIES PARTS LIST																		
KEY NO.	DESCRIPTION	PART NO.	EBU2X18BA1	EBU2X24BA1	EBU2X24FA1	EBU2X30BA1	EBU2X30FA1	EBU2X36BA1	EBU2X36FA1	EBU2X36JA1	EBU2X42JA1	EBU2X42LA1	EBU2X48FA1	EBU2X48JA1	EBU2X48LA1	EBU2X60JA1	EBU2X60LA1
1	Evap. Slab Coil Asy. (Ref. Only)	1173128	2														
1		1173129	–	2	2												
1		1173130	–	–	–	2	2										
1		1173131	–	–	–	–	–	2	2	2							
1		1173132	–	–	–	–	–	–	–	–	2	2					
1		1173134	–	–	–	–	–	–	–	–	–	–	2				
1		1173133	–	–	–	–	–	–	–	–	–	–	–	2	2		
1a		1173135	–	–	–	–	–	–	–	–	–	–	–	–	–	1	1
1b		1173136	–	–	–	–	–	–	–	–	–	–	–	–	–	1	1
2	Suction Header Asy.	1171342	1														
2		1173143	–	1													
2		1173144	–	–	1												
2		1173145	–	–	–	1											
2		1173146	–	–	–	–	1										
2		1173147	–	–	–	–	–	1									
2		1173148	–	–	–	–	–	–	1								
2		1173149	–	–	–	–	–	–	–	1							
2		1173150	–	–	–	–	–	–	–	–	1						
2		1173151	–	–	–	–	–	–	–	–	–	1					
2		1173152	–	–	–	–	–	–	–	–	–	–	1				
2		1173153	–	–	–	–	–	–	–	–	–	–	–	1			
2		1173154	–	–	–	–	–	–	–	–	–	–	–	–	1		
2		1173156	–	–	–	–	–	–	–	–	–	–	–	–	–	1	
2		1173155	–	–	–	–	–	–	–	–	–	–	–	–	–	–	1
3	Distributor	1173094	1	1	1	–	–	–	–	–	–	–	–	–	–	–	–
3		1173093	–	–	–	1	1	1	1	1	1	1	1	1	1	–	–
3		1173095	–	–	–	–	–	–	–	–	–	–	–	–	–	1	1
4	Thermo Expansion Valve (TXV)	1173164	1														
4		1173165	–	1	1	1	1	1	1	1							
4		1173166	–	–	–	–	–	–	–	–	1	1	1	1	1		
4		1173167	–	–	–	–	–	–	–	–	–	–	–	–	–	1	1
5	Access Fitting	1171507	1	1	1	1	1	1	1	1	1	1	1	1	1	1	1
6	Distributor Assembly	1173137	1	1	1	–	–	–	–	–	–	–	–	–	–	–	–
6		1173139	–		–	1	1	–	–	–	–	–	–	–	–	–	–
6		1173138	–	–		–	–	1	1	1	–	–	–	–	–	–	–
6		1173139	–	–	–	–	–	–	–	–	1	1	1	1	1	–	–
6		1173140	–	–	–	–	–			–	–	–	–	–	–	1	1
7	Condensate Pan	1173096	1	1	–	1	–	1	–	–	–	–	–	–	–	–	–
7		1173097	–	–	1	–	1	–	1	–	–	–	1	–	–	–	–
7		1173098	–	–	–	–	–	–	–	1	1	–	–	1	–	1	–
7		1173099	–	–	–	–	–	–	–	–	–	1	–	–	1	–	1
8	Insert, Drain Pan	1173161	–	–	–	–	–	–	–	–	–	–	1				
8		1173162	–	–	–	–	–	–	–	–	–	–	–	1	–	1	
8		1173163	–	–	–	–	–	–	–	–	–	–	–	–	1	–	1
A	Baffle Top	1173237	1	1	1	1	1	1	1	1	1	1					
A		1173238	–	–	–	–	–	–	–	–	–	–	1	1	1	1	1
B1	Bottom Delta (Triangle) Plate	1173103	2														
B1		1173104	–	2													

– continued on next page –

EBU2X18BA1–EBU2X60LA1 SERIES PARTS LIST																	
KEY NO.	DESCRIPTION	PART NO.	EBU2X18BA1	EBU2X24BA1	EBU2X24FA1	EBU2X30BA1	EBU2X30FA1	EBU2X36BA1	EBU2X36FA1	EBU2X36JA1	EBU2X42JA1	EBU2X42LA1	EBU2X48FA1	EBU2X48JA1	EBU2X48LA1	EBU2X60JA1	EBU2X60LA1
B1		1173107	–	–	2												
B1		1173105	–	–	–	2											
B1		1173108	–	–	–	–	2										
B1		1173106	–	–	–	–	–	2									
B1		1173109	–	–	–	–	–	–	2								
B1		1173111	–	–	–	–	–	–	–	2							
B1		1173112	–	–	–	–	–	–	–	–	2						
B1		1173100	–	–	–	–	–	–	–	–	–	2					
B1		1173110	–	–	–	–	–	–	–	–	–	–	2				
B1		1173112	–	–	–	–	–	–	–	–	–	–	–	2			
B1		1173101	–	–	–	–	–	–	–	–	–	–	–	–	2		
B1		1173113	–	–	–	–	–	–	–	–	–	–	–	–	–	2	
B1		1173102	–	–	–	–	–	–	–	–	–	–	–	–	–	–	2
B2	Top Delta (Triangle) Plate	1173117	2														
B2		1173118	–	2													
B2		1173121	–	–	2												
B2		1173119	–	–	–	2											
B2		1173122	–	–	–	–	2										
B2		1173120	–	–	–	–	–	2									
B2		1173123	–	–	–	–	–	–	2								
B2		1173125	–	–	–	–	–	–	–	2							
B2		1173126	–	–	–	–	–	–	–	–	2						
B2		1173114	–	–	–	–	–	–	–	–	–	2					
B2		1173124	–	–	–	–	–	–	–	–	–	–	2				
B2		1173126	–	–	–	–	–	–	–	–	–	–	–	2			
B2		1173115	–	–	–	–	–	–	–	–	–	–	–	–	2		
B2		1173127	–	–	–	–	–	–	–	–	–	–	–	–	–	2	
B2		1173116	–	–	–	–	–	–	–	–	–	–	–	–	–	–	2
D	Drain Plug	1085010	1	1	1	1	1	1	1	1	1	1	1	1	1	1	1
E	Brace Top	1173202	1	1	–	1	–	1									
E		1173203	–	–	1	–	1	–	1	–	–	–	1				
E		1173204	–	–	–	–	–	–	–	1	1	–	–	1	–	1	
E		1173205	–	–	–	–	–	–	–	–	–	1	–	–	1	–	1
F	Wrapper	1173210	1														
F		1173211	–	1													
F		1173213	–	–	1												
F		1173212	–	–	–	1											
F		1173214	–	–	–	–	1										
F		1173220	–	–	–	–	–	1									
F		1173221	–	–	–	–	–	–	1								
F		1173216	–	–	–	–	–	–	–	1							
F		1173217	–	–	–	–	–	–	–	–	1	–	–	1			
F		1173218	–	–	–	–	–	–	–	–	–	1	–	–	1		
F		1173215	–	–	–	–	–	–	–	–	–	–	1	–	–		
F		1173219	–	–	–	–	–	–	–	–	–	–	–	–	–	1	
F		1173222	–	–	–	–	–	–	–	–	–	–	–	–	–	–	1
G	Deck Front	1173207	1	1	–	1	–	1									
G		1173208	–	–	1	–	1	–	1	–	–	–	1				

– continued on next page –

EBU2X18BA1–EBU2X60LA1 SERIES PARTS LIST																		
KEY NO.	DESCRIPTION	PART NO.	EBU2X18BA1	EBU2X24BA1	EBU2X24FA1	EBU2X30BA1	EBU2X30FA1	EBU2X36BA1	EBU2X36FA1	EBU2X36JA1	EBU2X42JA1	EBU2X42LA1	EBU2X48FA1	EBU2X48JA1	EBU2X48LA1	EBU2X60JA1	EBU2X60LA1
G		1173209	–	–	–	–	–	–	–	1	1	–	–	1	–	1	
G		1173206	–	–	–	–	–	–	–	–	–	1	–	–	1	–	1
H	Plate Tubing	1173223	1	1	1	1	1	1	1	1	1	1	1	1	1	1	1
J	Door Case Coil	1173224	1														
J		1173225	–	1													
J		1173228	–	–	1												
J		1173226	–	–	–	1											
J		1173229	–	–	–	–	1										
J		1173227	–	–	–	–	–	1									
J		1173230	–	–	–	–	–	–	1								
J		1173231	–	–	–	–	–	–	–	1							
J		1173232	–	–	–	–	–	–	–	–	1	–	–	1			
J		1173233	–	–	–	–	–	–	–	–	–	1	–	–	1		
J		1173236	–	–	–	–	–	–	–	–	–	–	1	–	–		
J		1173234	–	–	–	–	–	–	–	–	–	–	–	–	–	1	
J		1173235	–	–	–	–	–	–	–	–	–	–	–	–	–	–	1
M	Grommet, Suction Line	1173158	1	1	1												
M		1173159	–	–	–	1	1	1	1	1	1	1					
M		1173160	–	–	–	–	–	–	–	–	–	–	1	1	1	1	1
N	Grommet, Liquid Line	1173157	1	1	1	1	1	1	1	1	1	1	1	1	1	1	1
)(	Washer, Teflon	1174012	1	1	1	1	1	1	1	1	1	1	1	1	1	1	1
)(	Strainer	1171740	1	1	1	1	1	1	1	1	1	1	1	1	1	1	1
)(	Warranty	40106403002	1	1	1	1	1	1	1	1	1	1	1	1	1	1	1
)(	Installation Instruction Manual	48401301000	1	1	1	1	1	1	1	1	1	1	1	1	1	1	1

Static Pressure Drop Across Coil at a Given CFM

Coil Size	CFM Across Coil	Static Pressure Drop Across Coil (Inches Water Column)		Coil Size	CFM Across Coil	Static Pressure Drop Across Coil (Inches Water Column)	
		Dry	Wet			Dry	Wet
18B 1½ tons	500	0.096	0.106	42J 3½ tons	1200	0.129	0.137
	600	0.127	0.140		1300	0.148	0.159
	700	0.161	0.183		1400	0.168	0.180
24B 2 tons	700	0.134	0.141		1500	0.189	0.203
	800	0.166	0.176		1600	0.211	0.228
	900	0.200	0.215	42L 3½ tons	1200	0.114	0.142
24F 2 tons	700	0.110	0.118		1300	0.130	0.161
	800	0.134	0.146		1400	0.146	0.182
	900	0.160	0.176		1500	0.164	0.202
30B 2½ tons	800	0.137	0.143		1600	0.182	0.222
	900	0.169	0.174	48F 4 tons	1400	0.250	0.263
	1000	0.204	0.211		1500	0.284	0.297
	1100	0.241	0.251		1600	0.320	0.336
30F 2½ tons	800	0.101	0.106		1700	0.358	0.376
	900	0.121	0.129		1800	0.398	0.418
	1000	0.143	0.154	48J 4 tons	1400	0.192	0.196
	1100	0.168	0.181		1500	0.219	0.225
36B 3 tons	1000	0.188	0.202		1600	0.245	0.253
	1100	0.224	0.240		1700	0.273	0.283
	1200	0.262	0.281		1800	0.303	0.314
	1300	0.303	0.325	48L 4 tons	1400	0.180	0.193
	1400	0.349	0.374		1500	0.198	0.214
36F 3 tons	1000	0.133	0.139		1600	0.222	0.241
	1100	0.154	0.163		1700	0.247	0.270
	1200	0.177	0.189		1800	0.275	0.296
	1300	0.203	0.216	60J 5 tons	1700	0.260	0.285
	1400	0.227	0.245		1800	0.288	0.315
36J 3 tons	1000	0.104	0.106		1900	0.316	0.346
	1100	0.121	0.124		2000	0.347	0.381
	1200	0.139	0.144		2100	0.378	0.413
	1300	0.159	0.166		2200	0.409	0.447
	1400	0.181	0.190	60L 5 tons	1700	0.232	0.263
					1800	0.256	0.291
					1900	0.283	0.321
					2000	0.308	0.354
					2100	0.335	0.386
					2200	0.363	0.419

COIL MODEL NUMBER IDENTIFICATION GUIDE									
	E	D	M	2	X	18	B	A	1
E = Evaporator									
D = Deluxe B = Builder M = Manufactured Home H = Horizontal Slab **TYPE**									
M = Cased, Multipositon D = Cased, Upflow / Downflow U = Cased, Upflow Only A = Uncased **APPLICATION**									
2 = R–22 4 = Environmentally Sound R–410A **REFRIGERANT**									
X = TXV **METERING DEVICE**									
18 = 18,000 BTUH = 1½ tons 24 = 24,000 BTUH = 2 tons 30 = 30,000 BTUH = 2½ tons 36 = 36,000 BTUH = 3 tons 42 = 42,000 BTUH = 3½ tons 48 = 48,000 BTUH = 4 tons 60 = 60,000 BTUH = 5 tons **NOMINAL CAPACITY**									
A = 11.8” B = 15.5” D = 17.9” F = 19.1” J = 22.8” L = 24.5” **WIDTH**									
A = Standard AT = Tin Coated Copper Tubes for Additional Corrosion Protection **SALES CODE / FEATURES**									
Engineering Revision									