Installation Instructions

- Safety Labeling & Rules
- Installation Requirements
- Location / Clearances
- Wiring
- Air Distribution
- Ductwork Connections
- Start-Up
- Maintenance

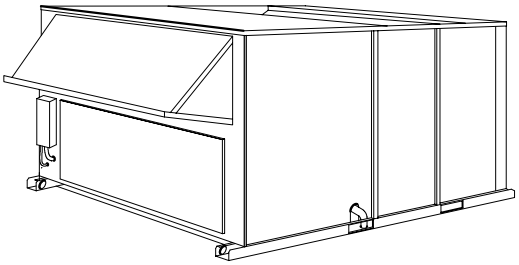

Models

Three Phase
208-230, 460, 575 Volt

PAS180H000	PAE180H000
PAS180L000	PAE180L000
PAS180S000	PAE180S000
PAS240H000	PAE240H000
PAS240L000	PAE240L000
PAS240S000	PAE240S000

COMBINATION PACKAGE ELECTRIC COOLING UNITS

Printed in Mexico

513 01 1903 00 3/11/05

Table of Contents

NOTES; **2**

Unit Dimensions **3-4**

Safe Installation Requirements **5**

Location And Set-up **6**
- Access Panels 6
- Clearances 6-7
- Installation 8
- Ground Level Installation 8
- Rooftop Installation 8
- Hoisting 8
- Unit Duct Connection 9
- Condensate Drain 9

Electrical Wiring **10**
- Line Voltage Wiring 10
- Converting 230V Units to 208V 11
- Field Installed Equipment 11
- Low Voltage Wiring 11
- Low Voltage Wiring With Economizer Option 11
- Thermostat 11
- Heat Anticipator 11
- Final Check 11
- Make Outdoor-Air Inlet Adjustments 11
- Install Outdoor-Air Hood 12

Air Distribution System **13**
- Ductwork 13
- Ductwork Connections 13
- Field Fabricate Ductwork 13
- Filters 13
- Circulating Blower 13
- Determining Blower Speed 13
- Circulating Blower Performance Data 14-18

Adjustable Belt Drive Blower **19**
- Belt Tension Adjustment 20

Start-up Procedure **21**
Blower and Phasing Check 21
Cooling Checks 22

Operation And Maintenance Instructions **22**
Starting the Unit After Shutdown 22
Cooling 22
Thermostat Fan Switch Operation 22
Monthly Maintenance and Inspection Checks 22
Air Filters (Factory Installed) 22
Disposable Replacement Filters 22
Condenser Coil 22
Condensate Drain 22
Annual Maintenance and Inspection 22
Circulating Air Blower 23
Evaporator Fan Service and Replacement (15 Ton) 23
Evaporator Fan Service and Replacement (20 Ton) 23
Heating Checks When Accessory Electric Heat is Installed 23
Turning Off the Unit 23
Heating 23
Cooling 23

Troubleshooting **24**
Trouble Shooting 24

Start-Up Checklist **25**

NOTES:

BASE UNIT DIMENSIONS - PAS/PAE180

Unit Size	Total Weight		Corner A		Corner B		Corner C		Corner D		Dim A		Dim B	
	lb	kg	lb	kg	lb	kg	lb	kg	lb	kg	ft-in	mm	ft-in	mm
180	1500	680	374	170	377	171	375	170	375	170	3-6	1062	3-7	1096

NOTES:
1. Dimensions in () are in millimeters.
2. Center of Gravity.
3. Direction of Airflow

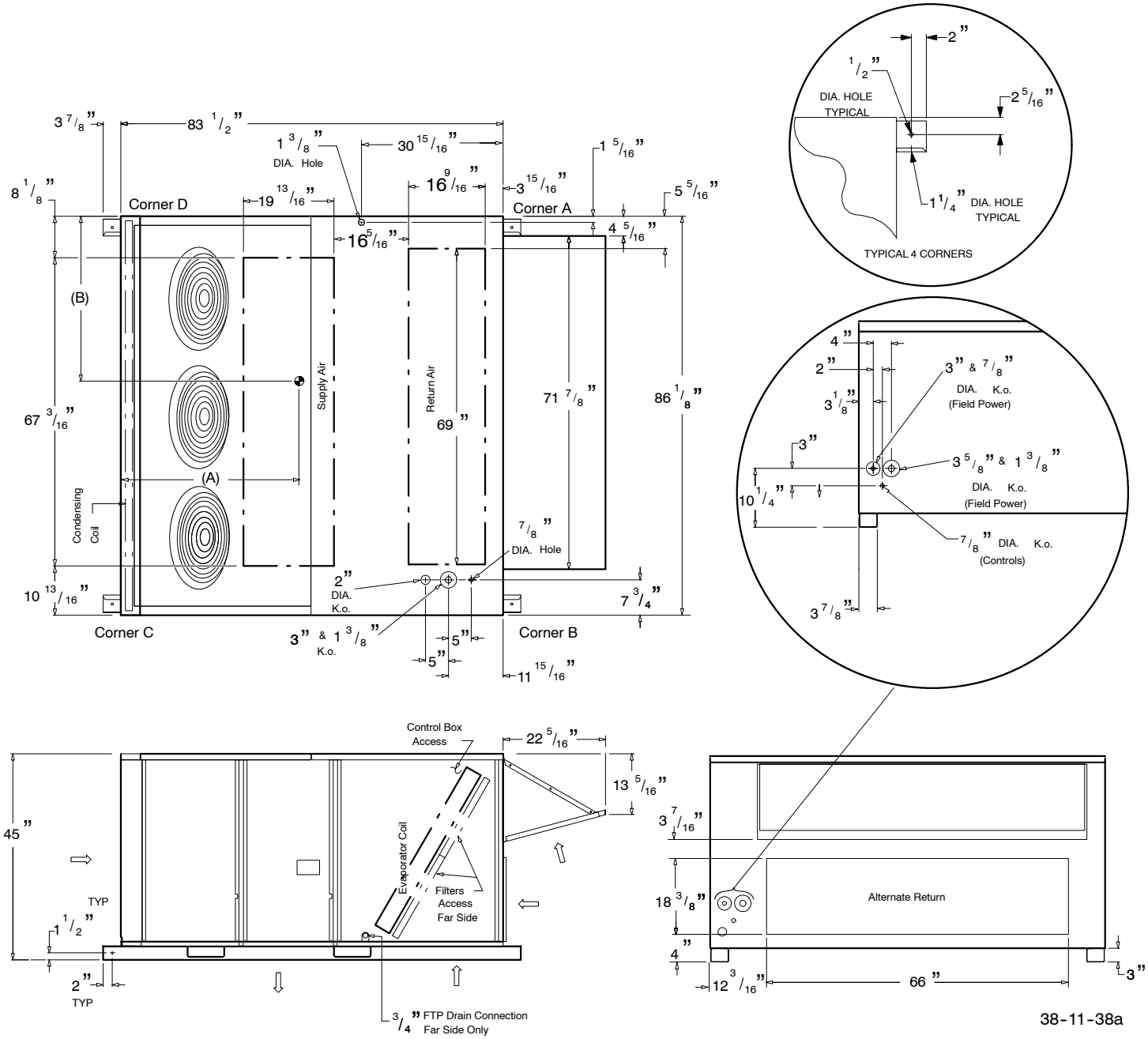

38-11-38a

BASE UNIT DIMENSIONS - PAS/PAE240

Unit Size	Total Weight		Corner A		Corner B		Corner C		Corner D		Dim A		Dim B	
	lb	kg	lb	kg	lb	kg	lb	kg	lb	kg	ft-in	mm	ft-in	mm
240	1775	805	412	187	416	189	468	212	479	217	3-3	989	3-7	1090

NOTES:
1. Dimensions in () are in millimeters.
2. Center of Gravity.
3. Direction of Airflow

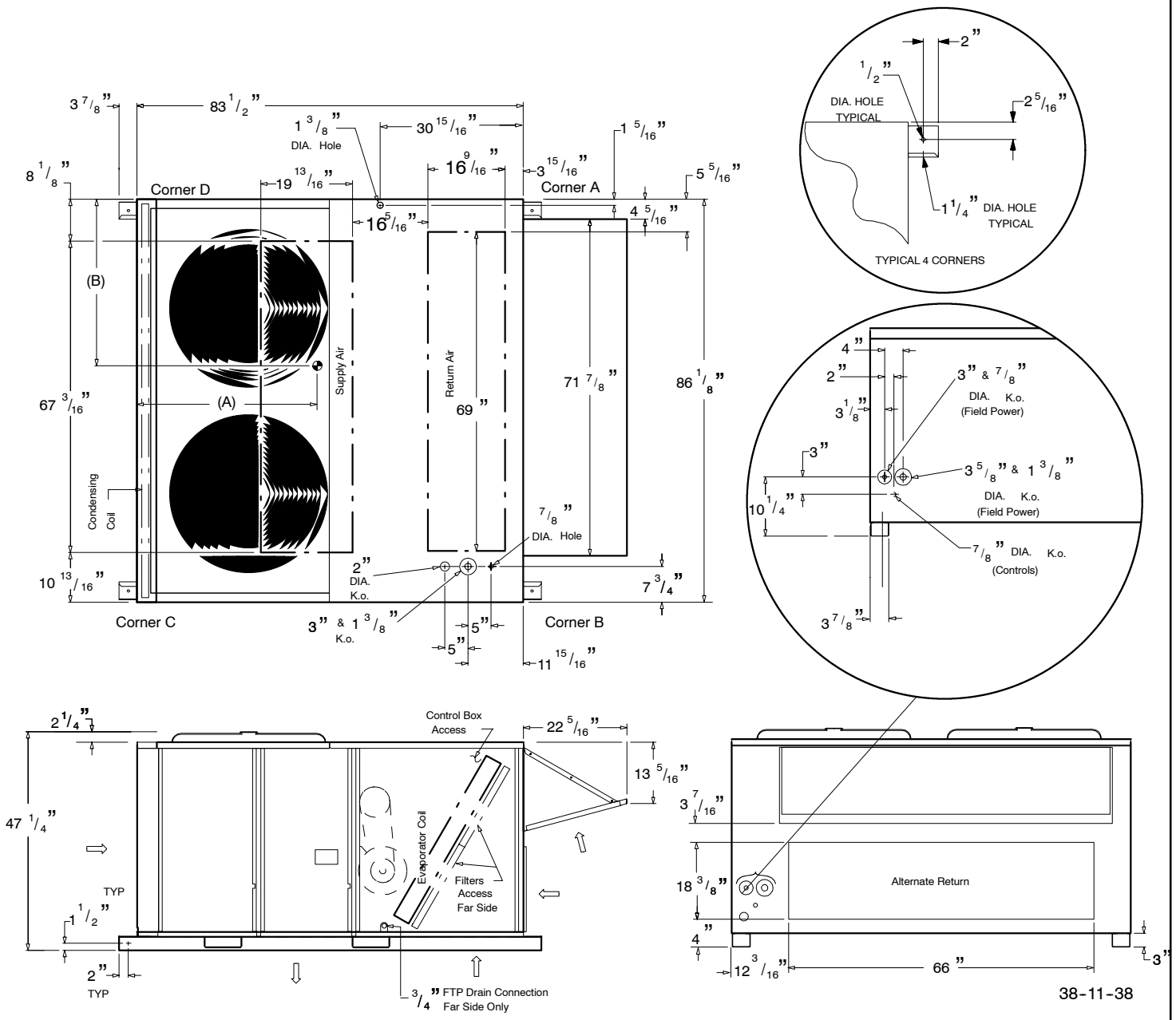

38-11-38

Safe Installation Requirements

⚠ WARNING

Installation or repairs made by unqualified persons could result in hazards to you and others. Installation must conform with local building codes or, in the absence of local codes, with National Electrical Code ANSI/NFPA 70 current edition. In Canada the CSA C.22.1 - Canadian Electrical Code Part 1 or current edition.

The information contained in this manual is intended for use by a qualified service technician familiar with safety procedures, equipped with the proper tools and test instruments.

Failure to carefully read and follow all instructions in this manual could result in property damage, personal injury and/or death.

- Installation **MUST** conform to the most current version of the following standards or a superseding standard.

  In the United States:

  - National Electrical Code ANSI/NFPA 70

  In Canada:

  - CSA C.22.1 – Canadian Electrical Code Part 1.
- Seal supply and return air ducts.

NOTE: It is the personal responsibility and obligation of the customer to contact a qualified installer to ensure that the installation is adequate and conforms to governing codes and ordinances.

Do not install unit in an indoor location. Do not locate unit air inlets near exhaust vents or other sources of contaminated air.

Although unit is weatherproof, guard against water from higher level runoff and overhangs.

Location And Set-up

The unit is designed for outdoor installation **ONLY**. The unit may be installed on a level concrete mounting base (or other adequate platform) at ground level or on a flat rooftop with an adequate platform. If using as a downflow model, use a roof curb. Typical installations are shown in **Figure 2**.

Access Panels

CAUTION

Unit will NOT operate properly without all access panels in place. Access panels are shown in Figure 1.

Unit MUST NOT be moved unless all access panels are in place.

⚠ WARNING

CARBON MONOXIDE POISONING HAZARD.

Failure to keep blower access panels in place could result in bodily injury and/or death.

Keep blower access panels in place.

Figure 1 **Access Panels**

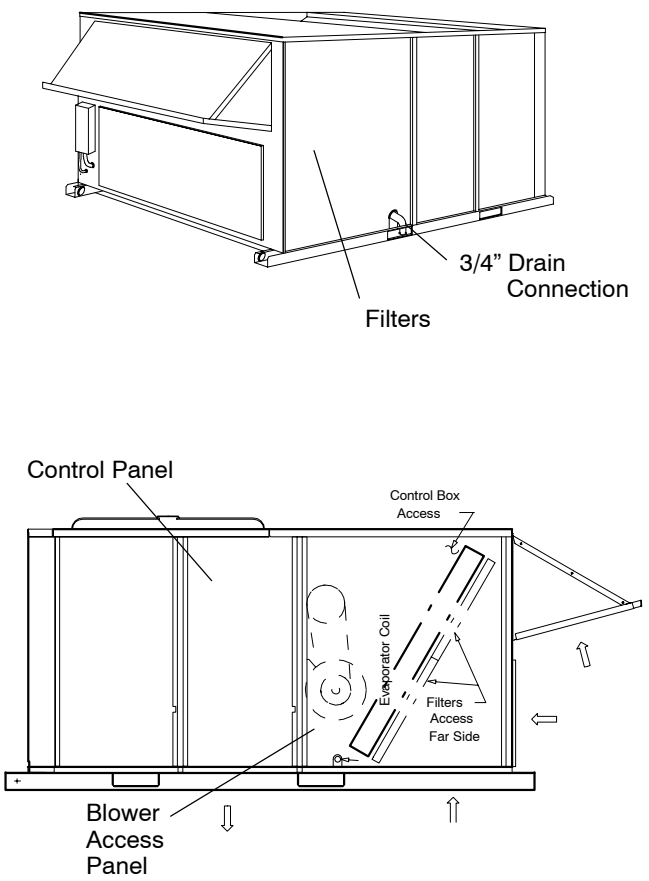

Clearances

The location **MUST** allow for minimum clearances and should not be adjacent to an area where the unit's operating sound level might be objectionable.

Minimum clearances, as specified below, **MUST** be maintained to provide adequate fire protection and room for service personnel. In addition, local codes **MUST** be observed.

Do **NOT** install the unit in a location that will permit discharged air from the condenser to recirculate to the condenser inlet.

⚠ CAUTION

RISK OF REDUCED COMPONENT LIFE

Failure to follow these Caution could result in premature component failure.

Do NOT operate unit in a corrosive atmosphere containing chlorine, fluorine, or any other corrosive chemicals.

⚠ WARNING

RISK OF INJURY

Failure to install a 90 degree turn in the return duct-work could result in bodily injury and/or death.

For vertical supply and return units, tools or parts could drop into ductwork and cause an injury. Install a 90 degree turn in the return ductwork between the unit and the conditioned space. If a 90 degree elbow cannot be installed, then a grille of sufficient strength and density should be installed to prevent objects from falling into the conditioned space. Due to electric heater, supply duct will require 90 degree elbow.

Figure 2 | **TYPICAL INSTALLATIONS & CLEARANCES**

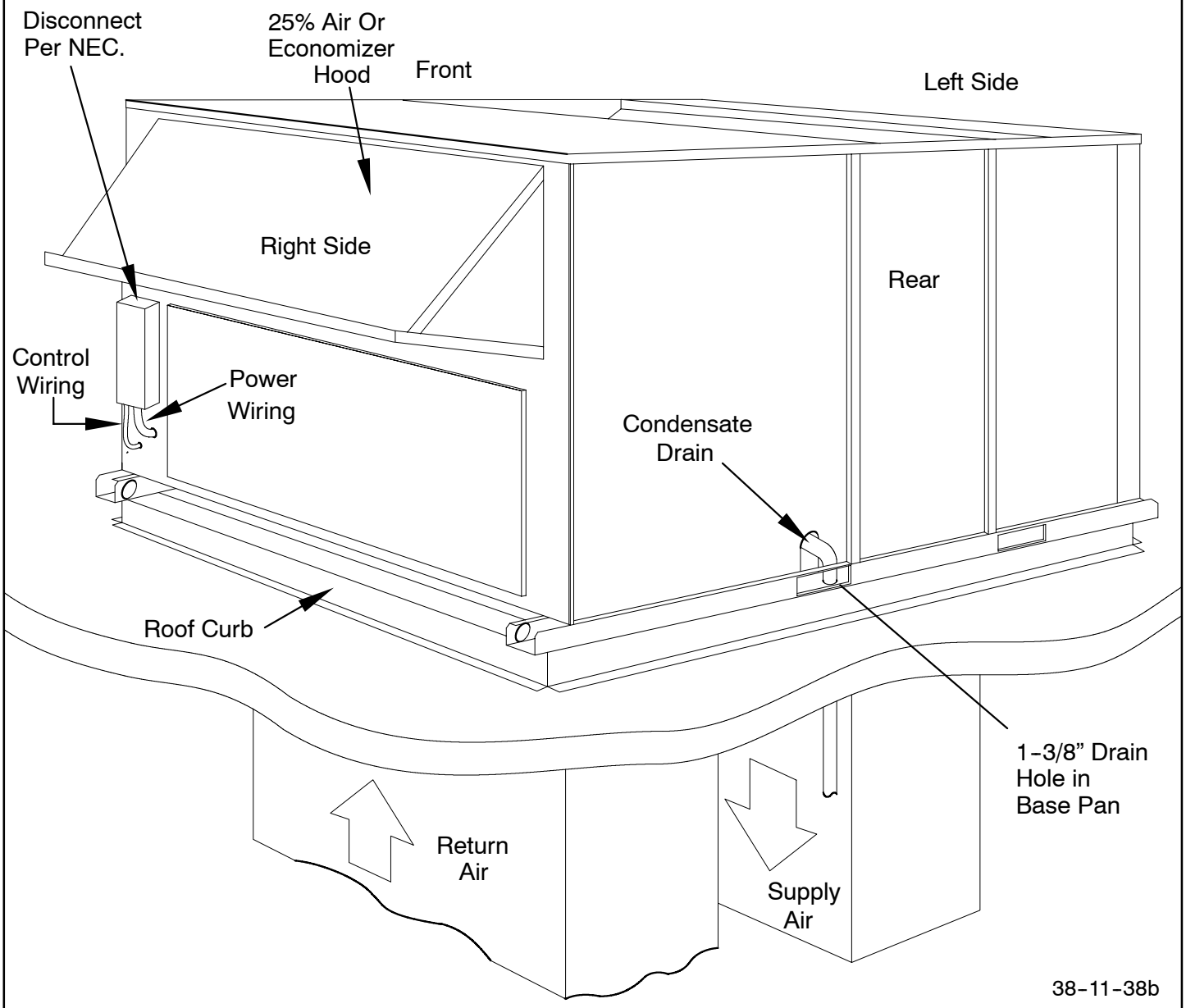

CLEARANCES

1. Ductwork to be attached to accessory roof curb only.
2. Minimum clearance:
   Rear: 7'-0" (2134) for coil removal. This dimension can be reduced to 4'-0" (1219) if conditions permit coil removal from the top.
   Left side: 4'-0" (1219) for proper condenser coil airflow.
   Front: 4'-0" (1219) for control box access.
   Right Side: 4'-0" (1219) for proper operation of damper and power exhaust if so equipped.
   Top: 6'-0" (1829) to assure proper condenser fan operation.
   Local Codes jurisdiction may prevail.
3. With the exception of clearance for the condenser coil and the damper/power exhaust as stated in Note #2, a removeable fence or barricade requires no clearance.
4. Dimensions are from outside of corner post. Allow 0-5/16" (8) on each side for top cover drip edge.
5. Units with electric heat require a 1 inch clearance for the first 24 inches of ductwork.
6. Outlet grilles must not lie directly below unit discharge.

Installation

NOTE:

Unit will NOT operate properly unless it is installed level front to rear and side to side.

The slope MUST NOT be greater than $^{1}/_{16}$″ per foot (10mm per meter). For side to side leveling, the control box side MUST always be higher.

Ground Level Installation

ROOF CURB: Assemble and install accessory horizontal adapter roof curb in accordance with instructions shipped with accessory. See Figure 3. Ductwork can be installed to horizontal adapter roof curb before unit is set in place. Adapter roof curb should be level. This is necessary to permit unit drain to function properly. Unit leveling tolerance is +/- 1/16" per linear foot in any direction. Refer to Accessory Horizontal Adapter Roof Curb Installation Instructions for additional information as required. When accessory horizontal adapter roof curb is used, unit may be installed on class A, B, or C roof covering material.

Figure 3 | **Horizontal Adapter Roof Curbs and Roof Curbs**

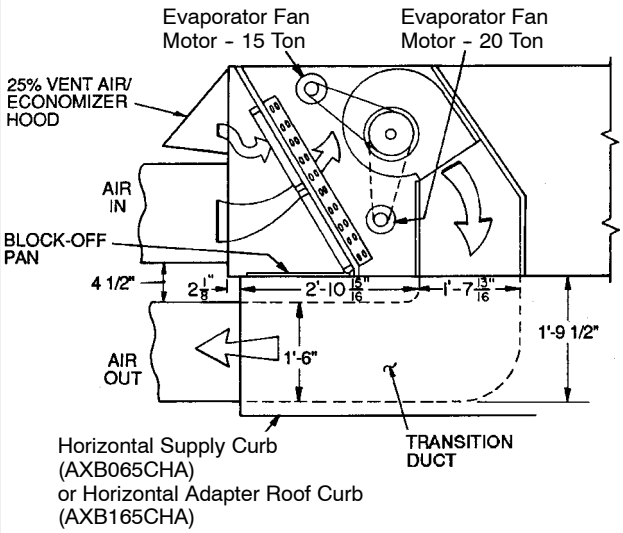

NOTE: For preassembled horizontal adapter roof curb part no. (AXB165CHA), the accessory kit includes a factory-designed, high-static, transition duct. For horizontal curb part no., (AXB065CHA), a field supplied transition duct is required.

IMPORTANT: The gasketing of the unit to the roof curb or adapter roof curb is critical for a watertight seal. Improperly applied gasket can also result in air leaks and poor unit performance.

ALTERNATE UNIT SUPPORT: When the curb or adapter cannot be used, install unit on a noncombustible surface. Support unit with sleepers, using unit curb support area. If sleepers cannot be used, support long sides or unit with a minimum of 3 equally spaced 4-in. x 4-in. pads on each side.

Rooftop Installation

- The unit **MUST** be situated to provide safe access for servicing.
- The existing roof structure **MUST** be adequate to support the weight of the unit or the roof **MUST** be reinforced.

  Check the weight of the unit in relation to the roof structure and local building codes or ordinances and reinforce roof structure if necessary. See product specification sheet for unit weights and corner weights.
- Support for the unit **MUST** be level and strong enough to carry unit weight. The support may consist of a platform or a combination of platform and roof beams or curb.

  The platform may be constructed of pressure treated wood and may be covered with Class A, B or C roof covering.
- Platform **MUST** allow for proper condensate trap installation and drainage. See associated text for more information about condensate drainage.

NOTE: MAKE SURE DOWNFLOW SUPPLY AND RETURN AIR DUCTS ARE FREE OF OBSTRUCTIONS BEFORE INSTALLING UNIT ON ROOF CURB OR ANY DOWNFLOW APPLICATION. Remove all forklift supports, covers, cardboard, etc., from the downflow return and supply air ducts.

Hoisting

NOTE: All access panels **MUST** be secured in place before hoisting.

The unit should be hoisted with two lifting slings. Attach the slings to rigging shackles that have been hooked through holes in the base rail. See **Figure 4**.

Two spreader bars **MUST** be placed on top of the unit to protect the unit from damage from the pressure exerted by the slings. Make sure that all equipment is adequate to handle the weight of the unit and that the slings will not allow the unit to shift. See **Figure 4**.

Inspect unit for transportation damage. File any claim with transportation agency. Keep unit upright and do not drop. Spreader bars are not required if top crating is left on unit.

Figure 4 | **Rigging and Hoisting**

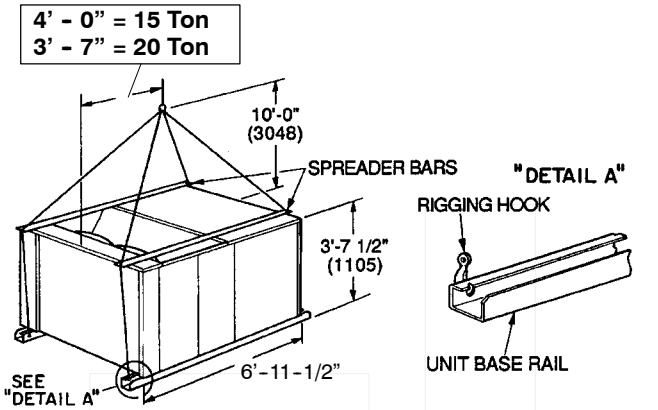

Notes: Remove boards at ends of unit and runners prior to rigging. Rig by inserting hooks into unit base rails as shown. Use corner post from packaging to protect coil from damage. Use bumper boards for spreader bars on all units.

Unit Duct Connections

These units are shipped ready for downflow operation but are adaptable to horizontal use. To convert to horizontal operation, refer to Ground Level Installation Section of this manual.

Attach all ductwork to roofcurb and roofcurb basepans. Refer to installation instructions shipped with accessory roof curb for more information.

Figure 5 | **Air Distribution - Thru the Bottom**

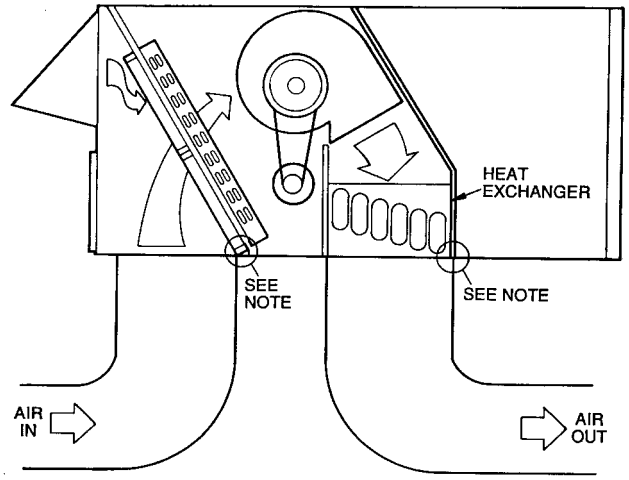

NOTE: Do not drill in this area; damage to basepan may result in water leak.

Condensate Drain

The condensate drain outlet is a 3/4 -in. threaded female connection located inside the evaporator section.

The circulating blower and the condenser fan create a negative pressure on the condensate drain line that will prevent the condensate from draining properly without a trap. To combat this negative pressure, a field supplied condensate trap that will allow a standing column of water of at least 4" **MUST** be installed. Bottom of outlet from trap **MUST** be at least 3" below bottom of outlet from unit. An 8-1/2" x 3/4" diameter and 2" x 3/4" pipe nipple, couple to standard 3/4" diameter elbows, provide a straight path down through hole in unit base rails. **See Figure 6.** A 3/4" drain line **MUST** be installed if required by local codes or if location of unit requires it. Run the drain line to an open drain or other suitable disposal point.

Figure 6 | **Condensate Drain Information**

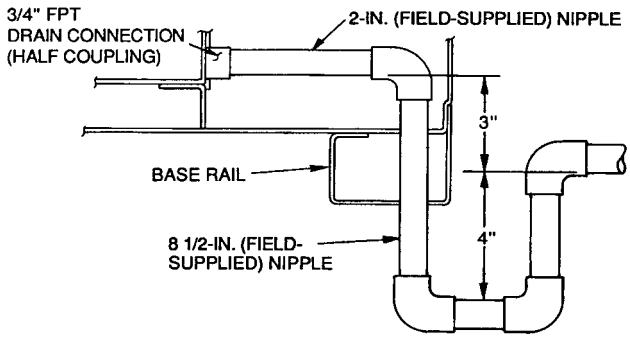

⚠ WARNING

ELECTRICAL SHOCK HAZARD.

Failure to follow this warning could result in property damage, personal injury, and/or death.

Shut off electric power at unit disconnect or service panel before making any electrical connections.

Unit MUST be grounded to electrical service panel.

NOTE: All electrical work **MUST** conform with the requirements of local codes and ordinances and in the United States the National Electrical Code ANSI/NFPA70-1990 (or current edition) and in Canada CSA C.22.1 - Canadian Electrical Code Part 1 (or current edition). Provide line voltage power supply from a separate protected circuit with a disconnect switch (when required) located within sight of the unit. Supply voltage, amperage, wire, fuse and disconnect switch sizes **MUST** conform with specifications on the unit rating plate.

Wiring **MUST** be protected from possible mechanical damage and **MUST NOT** interfere with removal of access panels, filters, etc.

All exposed wiring or connections **MUST** be made with weatherproof cable or wire unless installed in conduit.

Field Power Supply - Unit is factory wired for voltage shown on nameplate.
When installing units, provide a disconnect per NEC (National Electrical code) of adequate size.

For access to high and low voltage connections, remove the control box access panel. (see **Figure 1**).

Line Voltage Wiring

Route power ground lines through control box end panel or unit basepan and to connections as shown on unit wiring diagram.

Do **NOT** complete line voltage connections until unit is permanently grounded. All line voltage connections and the ground connection **MUST** be made with copper wire.

Figure 7 | **Typical Wiring Connections**

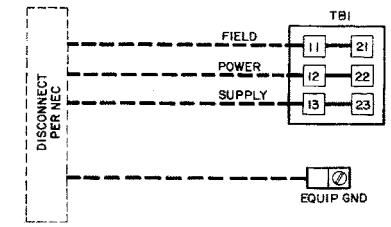

NOTE: The maximum wire size for TB1 is 2/0.

LEGEND
EQUIP — Equipment
GND — Ground
NEC — National Electrical Code
TB — Terminal Block

Field Power Wiring Connections

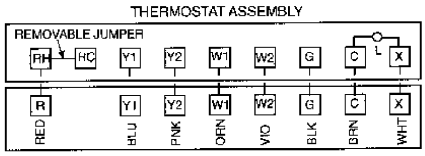

Field Control Thermostat Wiring

⚠ CAUTION

RISK OF REDUCED COMPONENT LIFE

Failure to follow these Caution could result in premature component failure.

The correct power phasing is critical in the operation of the scroll compressors. An incorrect phasing will cause the compressor to rotate in the wrong direction This may lead to premature compressor failure.

Converting 230V Units to 208V

Field wiring must confirm to temperature limitations for type 'T' wire. All field wiring must comply with NEC and local requirements.

Transformer # 1 is wired for 230-v unit. IF 208/230-v unit is to be run with 208-v power supply, the transformer must be rewired as follows:

1. Remove cap from red (208 v) wire.
2. Remove cap from orange (230 v) spliced wire.
3. Replace orange wire with red wire.
4. Recap both wires.

IMPORTANT: BE CERTAIN UNUSED WIRES ARE CAPPED. Failure to do so may damage the transformers.

Operating voltage to compressor must be within voltage range indicated on unit nameplate. On 3 phase units, voltages between phases must be balanced within 2%.

Unit failure as a result of operation on improper line voltage or excessive phase imbalance constitutes abuse and may cause damage to electrical components.

Field Installed Equipment

All wiring done in the field between the unit and other devices, or between separate devices that are field installed and

located, **MUST** not exceed the temperature limitations for type T wire and **MUST** be installed according to the manufacturer's instructions for the devices.

Low Voltage Wiring

Route thermostat cable or equivalent single leads of colored wire from subbase terminals through conduit in unit to low-voltage connections as shown on unit label wiring diagram.

NOTE: For wire runs up to 50 ft, use no. 18 AWG (American Wire Gage) insulated wire (35 C minimum), for 50-75 ft. runs, use no. 16 AWG insulated wire (35 C minimum), for over 75 ft, use no. 14 AWG insulated wire (35 C minimum). All wire larger than no. 18 AWG cannot be directly connected at the thermostat and will require a junction box and splice at the thermostat.

Low Voltage Wiring With Economizer Option

The economizer electrical harness taps into **Y1** and **Y2** on the low voltage terminal board. Low voltage wires from the thermostat are connected to **Y1** and **Y2** with or without an economizer.

Thermostat

The thermostat **MUST** be a field supplied 2 stage cooling, 2 stage heating thermostat.

The location of the thermostat has an important effect on the operation of the unit. **FOLLOW THE INSTRUCTIONS INCLUDED WITH THE THERMOSTAT FOR CORRECT LOCATION, MOUNTING AND WIRING.**

Heat Anticipator

Unit Size	Unit Voltages	kW*	Stage 1	Stage 2
15 & 20 Ton	208/230-3-60	26 / 34	.40	.66
		42 / 56	.66	.40
		56 / 75	.66	.66
	380-3-60	20	.40	.40
		35	.40	.66
	460-3-60	32	.40	.40
		55	.40	.66
	575-3-60	80	.66	.66
		50	.66	.66
* Heater kW is based on heater voltage of 208v, 240v, 380v, 480v, and 575v.				

Settings may be changed slightly to provide a greater degree of comfort for a particular installation.

Final Check

Make a final wiring check to be sure system is correctly wired. Inspect field installed wiring and the routing to ensure that rubbing or chafing due to vibration will not occur.

Make Outdoor-Air Inlet Adjustments

All units have a manual outdoor-air damper to provide ventilation air.

Damper can be reset to admit up to 25% outdoor air into return-air compartment. To adjust, loosen securing screws and move damper to desired setting, then retighten screws to secure damper. **See Figure 8.**

Figure 8 — **Standard 25% Outdoor-Air Section**

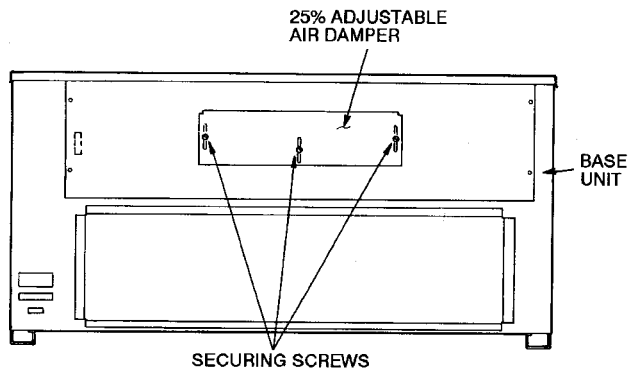

Install Outdoor-Air Hood

NOTE: The hood top panel, upper and lower filter retainers, hood drain pan, baffle and filter support bracket are secured opposite the condenser end of the unit. The screens, hood side panels, remaining section of filter support bracket, seal strip, and hardware are in a package located inside the return-air filter access panel. **See Figure 9.**

1. Attach seal strip to upper filter retainer. **See Figure 10.**
2. Assemble hood top panel, side panels, upper filter retainer, and drain pan. **See Figure 11.**

Figure 9 | **Outdoor-Air Hood Compartment**

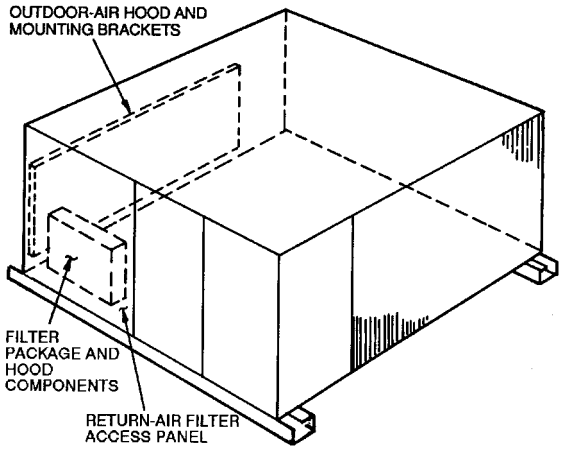

Figure 10 | **Seal Strip**

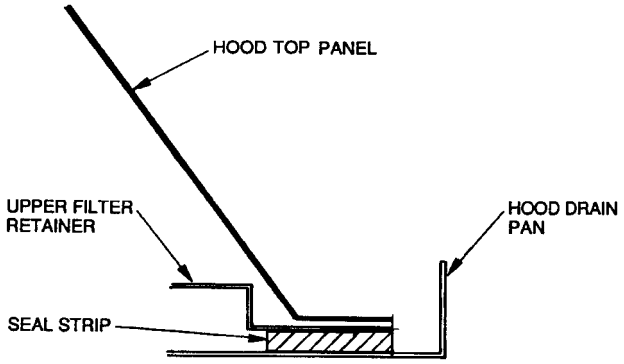

Figure 11 | **Outdoor-Air Hood Details**

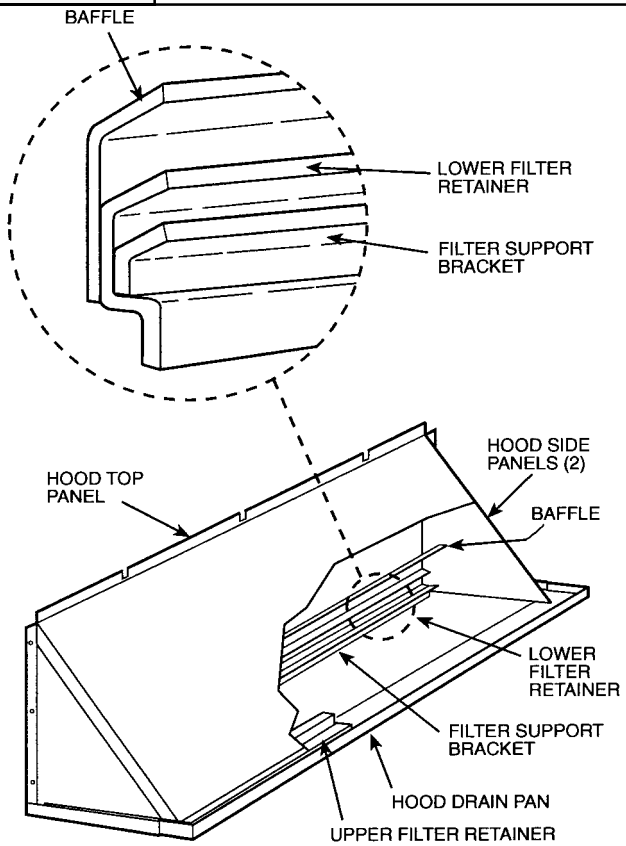

3. Secure lower filter retainer and support bracket to unit. **See Figure 11.** Leave screws loose on 20 ton units.
4. For 20 ton units only, slide baffle behind lower filter retainer and tighten screws.
5. Loosen sheet metal screws for top panel of base unit located above outdoor-air inlet opening, and remove screws for hood side panels located on the sides of the outdoor-air inlet opening.
6. Match notches in hood top panel to unit top panel screws. Insert hood flange between top panel flange and unit. Tighten screws.
7. Hold hood side panel flanges flat against unit, and install screws removed in Step 5.
8. Insert outdoor-air inlet screens and spacer in channel created by lower filter retainer and filter support bracket.
9. Attach remaining section of filter support bracket.

Ductwork

NOTE: The total heat loss from the structure as expressed in total Btu/hr **MUST** be calculated by manufacturer's method or in accordance with "A.S.H.R.A.E. Guide" or "Manual N – Load Calculations" published by the Air Conditioning Contractors of America or in Canada H.R.A.I. "Manual N". The total heat loss calculated should be equal to or less than the heating capacity. Output based on D.O.E. test procedures, steady state efficiency times input.

Ductwork, supply registers, and return air grilles **MUST** be designed and sized to handle the greater of the units heating or cooling air volume requirements. If the unit is connected to an existing system, the ductwork **MUST** be checked to make sure it is adequate. Extra runs or larger duct sizes may have to be installed. **Use only non-combustible type insulation on supply plenum or supply ductwork within 6 feet of unit.**

Maximum recommended velocity in trunk ducts is 1000 feet per minute (5.08 m/s). Velocity in branches should not exceed 800 feet per minute (4.06 m/s).

Ductwork installed outdoors should have a minimum of 2″ (50.8mm) of fiberglass insulation and a weatherproof vapor barrier. It should also be protected against damage. Caulk and flashing, or other means adequate to provide a permanent weather seal should be used.

Ductwork installed in attics or other areas exposed to outside temperatures should be installed with a minimum of 2″ (50.8mm) fiberglass insulation and have an indoor type vapor barrier.

Ductwork Connections

The use of flexible, **non-combustible** connectors between main trunk ducts and supply and return air plenums is recommended to minimize vibration transmission . Attach all ductwork to roof curb and roof curb basepans.

Field Fabricate Ductwork

Secure all ducts to roof curb and building structure on vertical units. Do not connect ductwork to unit. For horizontal applications, field supplied flanges should be attached to horizontal discharge openings and all ductwork secured to the flanges. Insulate and weatherproof all external ductwork, joints, and roof openings with counter flashing and mastic in accordance with applicable codes.

Ducts passing through an unconditioned space must be insulated and covered with a vapor barrier.

If a plenum return is used on a vertical unit, the return should be ducted through the roof deck to comply with applicable fire codes.

A minimum clearance is not required around ductwork. Cabinet return-air static shall not exceed –.45 in. wg without an economizer.

Filters

NOTE:

Do NOT operate the unit without all filters in place.

All air **MUST** pass through a filter before entering the unit. Electronic air cleaner, optional filter racks, or other accessible filter arrangements **MUST** be installed in the return air ductwork.

NOTE: If the unit has an economizer or any other type of outdoor air damper, disposable filters **MUST** be used in the internal filter racks.

For replacement filter sizes and instructions, see specification sheet.

Circulating Blower

Determining Blower Speed

1. From the system design, determine the external static pressure (ESP) for the supply ducts, return ducts and registers, diffusers, grilles, dampers, heaters and special filters (if any).
2. If unit is to be set up in cooling mode, add .08″ W.C. (20 Pa) for wet coil operation to the total ESP determined in Step 1.
3. For static additions due to installation of an economizer or manual air dampers, add .05 inches to ESP.
4. From the system design, determine the desired airflow in CFM (L/s). See **Figure 12** for CFM to L/s conversion table.
5. To determine the blower speed necessary to obtain the desired CFM (L/s), see the Circulating Blower Performance Data for the unit located on the pages that immediately follow.
6. Determine the blower RPM's needed to obtain the desired CFM (L/s).
7. Compare required RPM to unit's factory setting for blower RPM (see Blower Performance Tables). If different from the RPM your installation requires, the blower speed will need to be changed.
8. Following the circulating Blower Performance Data table is a table that shows how many turns open the adjustable blower motor pulley needs to be to obtain the required RPM.
9. To change the blower speed, see pages 18 and 19 .

Figure 12	Metric Conversions: Cubic Feet per Minute (CFM) to Liters per Second (L/s); Inches of Water Column (In. W.C.) to Pascals (Pa)														
CFM	L/s	CFM	L/s	CFM	L/s	In. W.C.	Pa	In. W.C.	Pa	In. W.C.	Pa	In. W.C.	Pa	In. W.C.	Pa
50	24	2550	1203	5050	2383	0.01	2	0.51	127	1.01	251	1.51	376	2.01	501
100	47	2600	1227	5100	2407	0.02	5	0.52	130	1.02	254	1.52	379	2.02	503
150	71	2650	1251	5150	2430	0.03	7	0.53	132	1.03	257	1.53	381	2.03	506
200	94	2700	1274	5200	2454	0.04	10	0.54	135	1.04	259	1.54	384	2.04	508
250	118	2750	1298	5250	2477	0.05	12	0.55	137	1.05	262	1.55	386	2.05	511
300	142	2800	1321	5300	2501	0.06	15	0.56	139	1.06	264	1.56	389	2.06	513
350	165	2850	1345	5350	2525	0.07	17	0.57	142	1.07	267	1.57	391	2.07	516
400	189	2900	1369	5400	2548	0.08	20	0.58	144	1.08	269	1.58	394	2.08	518
450	212	2950	1392	5450	2572	0.09	22	0.59	147	1.09	271	1.59	396	2.09	521
500	236	3000	1416	5500	2595	0.10	25	0.60	149	1.10	274	1.60	399	2.10	523
550	260	3050	1439	5550	2619	0.11	27	0.61	152	1.11	276	1.61	401	2.11	526
600	283	3100	1463	5600	2643	0.12	30	0.62	154	1.12	279	1.62	404	2.12	528
650	307	3150	1486	5650	2666	0.13	32	0.63	157	1.13	281	1.63	406	2.13	531
700	330	3200	1510	5700	2690	0.14	35	0.64	159	1.14	284	1.64	408	2.14	533
750	354	3250	1534	5750	2713	0.15	37	0.65	162	1.15	286	1.65	411	2.15	536
800	378	3300	1557	5800	2737	0.16	40	0.66	164	1.16	289	1.66	413	2.16	538
850	401	3350	1581	5850	2761	0.17	42	0.67	167	1.17	291	1.67	416	2.17	541
900	425	3400	1604	5900	2784	0.18	45	0.68	169	1.18	294	1.68	418	2.18	543
950	448	3450	1628	5950	2808	0.19	47	0.69	172	1.19	296	1.69	421	2.19	545
1000	472	3500	1652	6000	2831	0.20	50	0.70	174	1.20	299	1.70	423	2.20	548
1050	495	3550	1675	6050	2855	0.21	52	0.71	177	1.21	301	1.71	426	2.21	550
1100	519	3600	1699	6100	2879	0.22	55	0.72	179	1.22	304	1.72	428	2.22	553
1150	543	3650	1722	6150	2902	0.23	57	0.73	182	1.23	306	1.73	431	2.23	555
1200	566	3700	1746	6200	2926	0.24	60	0.74	184	1.24	309	1.74	433	2.24	558
1250	590	3750	1770	6250	2949	0.25	62	0.75	187	1.25	311	1.75	436	2.25	560
1300	613	3800	1793	6300	2973	0.26	65	0.76	189	1.26	314	1.76	438	2.26	563
1350	637	3850	1817	6350	2997	0.27	67	0.77	192	1.27	316	1.77	441	2.27	565
1400	661	3900	1840	6400	3020	0.28	70	0.78	194	1.28	319	1.78	443	2.28	568
1450	684	3950	1864	6450	3044	0.29	72	0.79	197	1.29	321	1.79	446	2.29	570
1500	708	4000	1888	6500	3067	0.30	75	0.80	199	1.30	324	1.80	448	2.30	573
1550	731	4050	1911	6550	3091	0.31	77	0.81	202	1.31	326	1.81	451	2.31	575
1600	755	4100	1935	6600	3115	0.32	80	0.82	204	1.32	329	1.82	453	2.32	578
1650	779	4150	1958	6650	3138	0.33	82	0.83	207	1.33	331	1.83	456	2.33	580
1700	802	4200	1982	6700	3162	0.34	85	0.84	209	1.34	334	1.84	458	2.34	583
1750	826	4250	2006	6750	3185	0.35	87	0.85	212	1.35	336	1.85	461	2.35	585
1800	849	4300	2029	6800	3209	0.36	90	0.86	214	1.36	339	1.86	463	2.36	588
1850	873	4350	2053	6850	3233	0.37	92	0.87	217	1.37	341	1.87	466	2.37	590
1900	897	4400	2076	6900	3256	0.38	95	0.88	219	1.38	344	1.88	468	2.38	593
1950	920	4450	2100	6950	3280	0.39	97	0.89	222	1.39	346	1.89	471	2.39	595
2000	944	4500	2124	7000	3303	0.40	100	0.90	224	1.40	349	1.90	473	2.40	598
2050	967	4550	2147	7050	3327	0.41	102	0.91	227	1.41	351	1.91	476	2.41	600
2100	991	4600	2171	7100	3350	0.42	105	0.92	229	1.42	354	1.92	478	2.42	603
2150	1015	4650	2194	7150	3374	0.43	107	0.93	232	1.43	356	1.93	481	2.43	605
2200	1038	4700	2218	7200	3398	0.44	110	0.94	234	1.44	359	1.94	483	2.44	608
2250	1062	4750	2242	7250	3421	0.45	112	0.95	237	1.45	361	1.95	486	2.45	610
2300	1085	4800	2265	7300	3445	0.46	115	0.96	239	1.46	364	1.96	488	2.46	613
2350	1109	4850	2289	7350	3468	0.47	117	0.97	242	1.47	366	1.97	491	2.47	615
2400	1133	4900	2312	7400	3492	0.48	120	0.98	244	1.48	369	1.98	493	2.48	618
2450	1156	4950	2336	7450	3516	0.49	122	0.99	247	1.49	371	1.99	496	2.49	620
2500	1180	5000	2360	7500	3539	0.50	125	1.00	249	1.50	374	2.00	498	2.50	623

PAS Series PERFORMANCE DATA

CIRCULATING BLOWER PERFORMANCE - 15 TON UNITS (3.7 HP Standard Motor w/891-1179 rpm drive pkg)

CFM	EXTERNAL STATIC PRESSURE IN INCHES WATER COLUMN - DRY COIL WITH FILTER															
	0.3		0.5		0.7		0.9		1.1		1.3		1.5		1.7	
	RPM	W	RPM	W	RPM	W	RPM	W	RPM	W	RPM	W	RPM	W	RPM	W
5250	763	1539	858	1732	947	1926	1029	2123	1107	2321	1180	2523	1251	2727	1319	2933
5500	788	1724	879	1920	963	2117	1042	2316	1117	2516	1188	2719	1257	2924	1322	3132
5750	814	1923	900	2122	981	2321	1057	2523	1129	2725	1198	2930	1264	3137	1327	3346
6000	845	2068	931	2273	1011	2478	1087	2685	1160	2893	1229	3103	1295	3316	1359	3530
6250	876	2224	961	2434	1042	2645	1117	2858	1191	3071	1260	3287	1326	3504		
6500	902	2456	984	2670	1061	2883	1134	3098	1204	3314	1271	3531				
6750	929	2704	1008	2920	1082	3136	1152	3353	1220	3571						

NOTES:
1) Maximum motor Watts is 3775 for standard 3.7 HP motor.
2) Maximum blower wheel speed is 1468 rpm.
3) Motor drive range is 891 to 1179 rpm.
4) Air flow data based on dry coil with filters. Deduct 0.08 inches for wet coil performance.
5) Operation in shaded areas requires accessory high static motor and drive kit sold separately.
6) Boldface indicates field-supplied drive is required.

CIRCULATING BLOWER PERFORMANCE - 20 TON UNITS (7.5 HP Standard Motor w/1002-1225 rpm drive pkg)

CFM	EXTERNAL STATIC PRESSURE IN INCHES WATER COLUMN - DRY COIL WITH FILTER															
	0.3		0.5		0.7		0.9		1.1		1.3		1.5		1.7	
	RPM	W	RPM	W	RPM	W	RPM	W	RPM	W	RPM	W	RPM	W	RPM	W
6750	803	2577	869	2836	932	3102	992	3374	1049	3652	1104	3935	1158	4224	1209	4519
7000	828	2780	892	3042	953	3310	1011	3583	1067	3863	1121	4148	1173	4438	1224	4733
7250	853	3004	915	3268	975	3538	1031	3813	1086	4095	1139	4381	1190	4672	1240	4968
7500	878	3227	938	3494	996	3766	1051	4043	1105	4326	1156	4613	1207	4906	1255	5203
7750	903	3471	962	3740	1018	4015	1072	4294	1125	4578	1175	4867	1225	5161	1272	5459
8000	928	3715	985	3986	1040	4263	1093	4544	1144	4830	1194	5120	1242	5415	1289	5714
8250	954	3980	1009	4254	1063	4532	1115	4815	1165	5103	1213	5395	1261	5691	1307	5991

NOTES:
1) Maximum motor Watts is 7915 for standard 7.5 HP motor.
2) Maximum blower wheel speed is 1540 rpm.
3) Motor drive range is 1002-1225 rpm.
4) Air flow data based on dry coil with filters. Deduct 0.08 inches for wet coil performance.
5) Operation in shaded areas requires accessory high static drive kit sold separately.

PAE Series PERFORMANCE DATA

CIRCULATING BLOWER PERFORMANCE - 15 TON UNITS (5 HP Std Motor w/873-1021 rpm drive pkg)

CFM	EXTERNAL STATIC PRESSURE IN INCHES WATER COLUMN - DRY COIL WITH FILTER															
	0.3		0.5		0.7		0.9		1.1		1.3		1.5		1.7	
	RPM	W	RPM	W	RPM	W	RPM	W	RPM	W	RPM	W	RPM	W	RPM	W
5250	**740**	**1514**	**765**	**1599**	**840**	**1848**	909	2103	974	2365	1036	2635	1095	2911	1150	3193
5500	**730**	**1596**	**785**	**1780**	**856**	**2035**	923	2295	985	2562	1045	2836	1101	3115	1155	3401
5750	**734**	**1726**	**805**	**1972**	873	2233	937	2500	998	2771	1055	3048	1110	3332	1163	3621
6000	**759**	**1854**	**832**	**2118**	901	2388	965	2663	1026	2943	1083	3228	1139	3520	1192	3817
6250	**787**	**2003**	**860**	**2275**	928	2554	992	2837	1054	3126	1111	3419	1167	3719		
6500	**812**	**2231**	881	2510	946	2794	1008	3082	1067	3375	1123	3674				
6750	**837**	**2476**	903	2761	966	3050	1026	3344	1082	3643						

NOTES:
1) Maximum motor Watts is 5180 for standard 5 HP motor.
2) Maximum blower wheel speed is 1550 rpm.
3) Motor drive range is 873 to 1021 rpm.
4) Air flow data based on dry coil with filters. Deduct 0.08 inches for wet coil performance.
5) Operation in shaded areas requires accessory high static drive kit sold separately.
6) Boldface indicates field-supplied drive is required.

CIRCULATING BLOWER PERFORMANCE - 20 TON UNITS (7.5 HP Standard Motor w/1002-1225 rpm drive pkg)

CFM	EXTERNAL STATIC PRESSURE IN INCHES WATER COLUMN - DRY COIL WITH FILTER															
	0.3		0.5		0.7		0.9		1.1		1.3		1.5		1.7	
	RPM	W	RPM	W	RPM	W	RPM	W	RPM	W	RPM	W	RPM	W	RPM	W
6750	**819**	**2945**	**885**	**3166**	**947**	**3392**	1007	3623	1064	3858	1119	4095	1172	4335	1224	4579
7000	**844**	**3151**	**908**	**3372**	**968**	**3598**	1026	3828	1082	4062	1136	4299	1188	4538	1239	4780
7250	**870**	**3374**	**932**	**3595**	**991**	**3820**	1047	4050	1102	4283	1155	4519	1206	4758	1256	4999
7500	**895**	**3596**	**955**	**3817**	1013	4042	1068	4271	1121	4504	1173	4739	1223	4977	1272	5217
7750	**921**	**3835**	**980**	**4056**	1036	4280	1090	4509	1142	4741	1192	4976	1241	5213	1289	5453
8000	**947**	**4073**	1004	4294	1058	4518	1111	4747	1162	4978	1211	5212	1259	5449	1306	5688
8250	**973**	**4328**	1029	4549	1082	4773	1133	5001	1183	5232	1231	5465	1278	5702	1324	5940

NOTES:
1) Maximum motor Watts is 7915 for standard 7.5 HP motor.
2) Maximum blower wheel speed is 1550 rpm.
3) Motor drive range is 1002-1225 rpm.
4) Air flow data based on dry coil with filters. Deduct 0.08 inches for wet coil performance.
5) Operation in shaded areas requires accessory high static drive kit sold separately.
6) Boldface indicates field-supplied drive is required.

PAS Series PERFORMANCE DATA (cont.)

AIR QUANTITY LIMITS

UNIT	MINIMUM CFM	MAXIMUM CFM
PAS180	4,500	7,500
PAS240	6,000	10,000

EVAPORATOR-FAN MOTOR EFFICIENCY

UNIT		MOTOR EFFICIENCY %
PAS180	(3.7 hP)	85.8
PAS240	(7.5 hP)	88.5

OUTDOOR SOUND POWER

UNIT SIZE	SOUND RATING (60 Hz)	A-WEIGHTED (db)	OCTAVE BANDS							
			63	125	250	500	1000	2000	4000	8000
PAS180	8.8 Bels	87.8	90.8	88.7	86.4	84.3	83.5	78.4	75.6	66.8
PAS240	9.5 Bels	94.1	98.7	92.3	93.8	90.9	89.6	85.9	80.3	74.3

Bels - Sound Levels (1 bel = 10 decibels)

FAN RPM AT MOTOR PULLEY SETTINGS*

UNIT PAS	MOTOR PULLEY TURNS OPEN												
	0	1/2	1	1-1/2	2	2-1/2	3	3-1/2	4	4-1/2	5	5-1/2	6
180**	****	****	1179	1150	1121	1093	1064	1035	1006	978	949	920	891
180-575v Only**	****	****	1429	1403	1376	**1349**	**1323**	**1296**	**1269**	**1242**	**1215**	**1188**	**1159**
180***	****	****	1559	1522	1488	1455	1422	1389	1356	1323	1289	1256	1227
240**	****	****	1225	1209	1187	1165	1143	1120	1098	1076	1053	1031	1002
240***	****	****	1458	1434	1407	1381	1354	1328	1301	1275	1248	1222	1193

*** Approximate fan rpm shown.**
**** Indicates standard drive package**
*****Indicates alternate drive package.**
******Due to belt and pulley size, pully cannot be set to this number of turns open.**

Evaporator-Fan Motor Performance

UNIT	UNIT VOLTAGE	MAXIMUM ACCEPTABLE CONTINUOUS BHP*	MAXIMUM ACCEPTABLE CONTINUOUS WATTS	MAXIMUM AMP DRAW
PAS180	208/230	4.25	3,775	10.5
	460			4.8
	575	3.45	3,065	3.9
PAS240	208/230	8.70	7,915	22.0
	460	9.50	8,640	13.0
	575	8.70	7,915	10.0

Bhp - Brake Horsepower

*Extensive motor and electrical testing on these units ensures that the full horsepower range of the motors can be utilized with confidence Using your fan motors up to the horsepower ratings shown in this table will not result in nuisance tripping or premature motor failure. Unit warranty will not be affected.

NOTE: All indoor-fan motors 5 hp and larger meet the minimum efficiency requirements as established by the Energy Policy Act of 1992 (EPACT) effective October 24, 1997.

PAE Series PERFORMANCE DATA (cont.)

AIR QUANTITY LIMITS

UNIT	MINIMUM CFM	MAXIMUM CFM
PAE180	4,500	7,500
PAE240	6,000	10,000

EVAPORATOR-FAN MOTOR EFFICIENCY

UNIT		MOTOR EFFICIENCY %
PAE180	(5.0 hP)	87.5
PAE240	(7.5 hP)	88.5

OUTDOOR SOUND POWER

UNIT	SOUND RATING (60 Hz)	A-WEIGHTED (db)	OCTAVE BANDS							
			63	125	250	500	1000	2000	4000	8000
PAE180	8.8 Bels	87.8	90.8	88.7	86.4	84.3	83.5	78.4	75.6	66.8
PAE240	9.5 Bels	94.1	98.7	92.3	93.8	90.9	89.6	85.9	80.3	74.3

Bels - Sound Levels (1 bel = 10 decibels)

FAN RPM AT MOTOR PULLEY SETTINGS*

UNIT PAE	MOTOR PULLEY TURNS OPEN												
	0	1/2	1	1-1/2	2	2-1/2	3	3-1/2	4	4-1/2	5	5-1/2	6
180**	****	****	****	****	1021	1002	984	965	947	928	910	891	873
180***	****	****	****	****	1200	1178	1156	1134	1112	1091	1069	1047	1025
240**	****	****	1225	1209	1187	1165	1143	1120	1098	1076	1053	1031	1002
240***	****	****	1458	1434	1407	1381	1354	1328	1301	1275	1248	1222	1193

*** Approximate fan rpm shown.**
**** Indicates standard drive package**
*****Indicates alternate drive package.**
******Due to belt and pulley size, pully cannot be set to this number of turns open.**

Evaporator-Fan Motor Performance

UNIT	UNIT VOLTAGE	MAXIMUM ACCEPTABLE CONTINUOUS BHP*	MAXIMUM ACCEPTABLE CONTINUOUS WATTS	MAXIMUM AMP DRAW
PAE180	208/230	3.13	2700	15.8
	460			7.9
	575	3.38	3,065	6.0
PAE240	208/230	8.70	7,915	22.0
	460	9.50	8,640	13.0
	575	8.70	7,915	10.0

Bhp - Brake Horsepower

*Extensive motor and electrical testing on these units ensures that the full horsepower range of the motors can be utilized with confidence Using your fan motors up to the horsepower ratings shown in this table will not result in nuisance tripping or premature motor failure. Unit warranty will not be affected.

NOTE: All indoor-fan motors 5 hp and larger meet the minimum efficiency requirements as established by the Energy Policy Act of 1992 (EPACT) effective October 24, 1997.

⚠ WARNING

PERSONAL INJURY HAZARD.
Failure to do so may result in personal injury.
Use extreme care during the following procedures and obey Safety Information.

The following safety rules **MUST** always be followed when working near belt drive.

Always Turn The Power Off

Turn electric power to the unit **OFF** before you begin working on it.

Always Wear Protective Clothing

NEVER wear loose or bulky clothes, such as neckties, exposed shirttails, loose sleeves, or lab coats around belt drives. Wear gloves while inspecting sheaves to avoid nicks, burrs, or sharply worn pulley edges.

The blower speed is changed by adjusting the variable speed pulley mounted on the blower motor.

NOTE for 20 Ton: A 3-1/2" bolt and threaded plate are included in the installer's packet. They can be added to the motor support channel below the motor mounting plate to aid in raising the fan motor.

If the blower speed needed is different than the speed of the blower as shipped, follow the steps below to change the blower speed. Before changing the blower speed, read the above safety rules first.

1. Turn electric power **OFF.**
2. Remove the side blower access panel (see **Figure 1**).
3. 15 Ton Only - Loosen belt by loosening carriage nuts holding motor mount assembly to fan scroll side plates (A and B).

   20 Ton Only - Loosen nuts on the 2 carriage bolts in the motor mounting base. Install jacking bolt and plate under motor base (bolt and plate are shipped in installer's packet). Using bolt and plate, raise motor to top of slide and remove belt. Secure motor in this position by tightening the nuts on the carriage bolts.
4. Loosen movable-pulley flange setscrew. See page 16 for air quanity limits.
5. Screw movable flange toward fixed flange to increases speed and away from fixed flange to decrease speed. Increasing fan speed increases load load on motor. Do not exceed maximum speed specified in the performance data listed in this instruction.
6. Set movable flange at nearest keyway of pulley hub and tighten setscrew. (See Table on page 16 for speed change for each full turn of pulley flange.)
7. Replace and tighten belts. See Belt Tension Adjustment section on page 22.

Figure 13 15 Ton Evaporator Fan Motor Adjustment

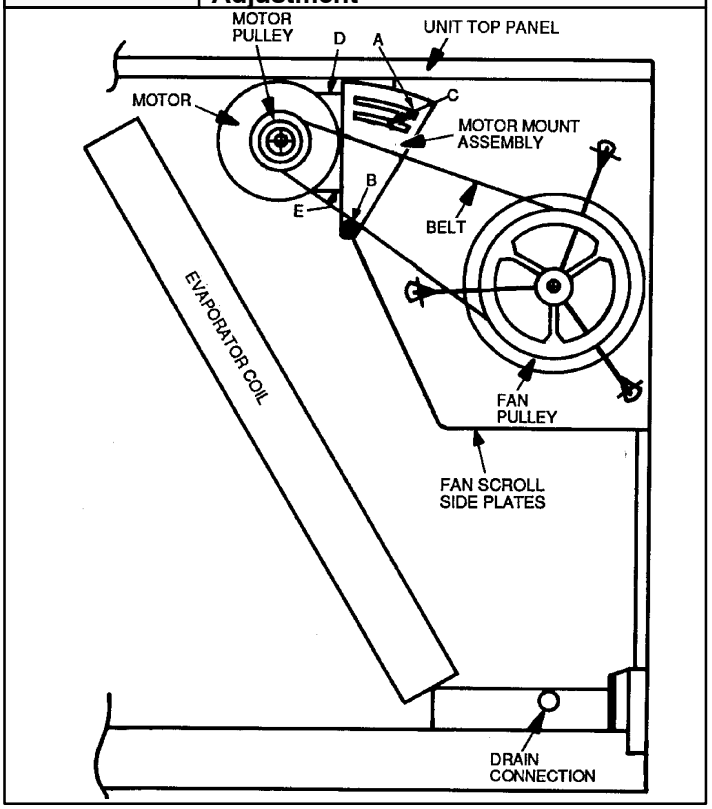

Figure 14 20 Ton Evaporator Fan Motor Adjustment

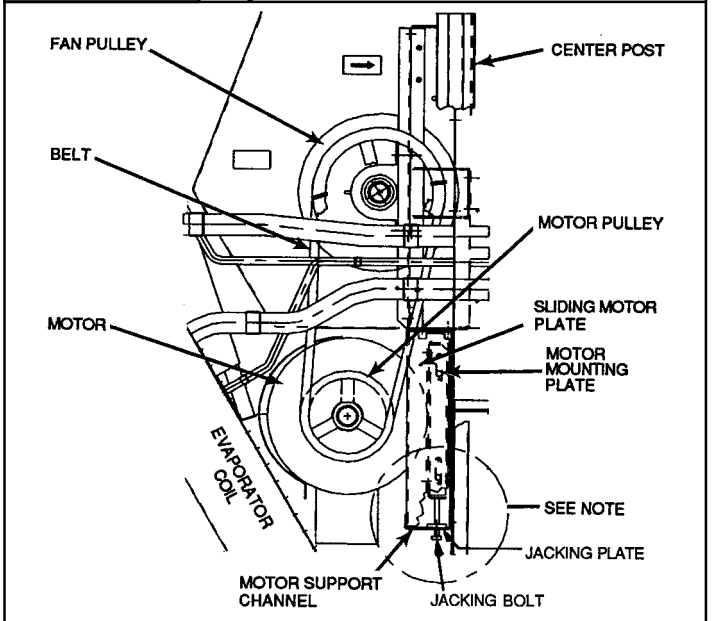

NOTE: A 3-1/2" jacking bolt (1171103) and threaded jacking plate (1171400) are included in the unit's base pan. They should be added to the motor support channel below the motor mounting plate to aid in raising the motor.

Belt Tension Adjustment

Figure 15	Checking Tension and Deflection

PA(S/E)180 – 1/2” deflection with 5–10 lbs. of force.
PA(S/E)240 – 3/8” deflection with 8–10 lbs. of force.

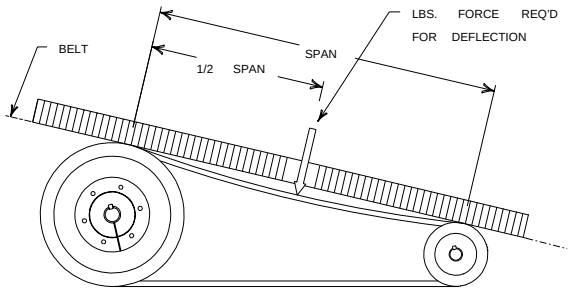

1. Turn motor adjustment bolt clockwise until the belt has enough tension at the proper deflection. Use one of the commercially available belt tension gauges to set the correct tension at the proper deflection (see **Figure 20 & 21).**
2. Use a straight–edge (angle iron, straight piece of board or anything with a good straight surface or edge) to check the alignment of the blower pulley with blower motor pulley (see **Figure 21**).

   It may be necessary to back the tension off the belt temporarily and tighten one of the motor mount bolts before it is possible to adjust the angle of the blower motor.
3. Tighten all blower motor mount bolts.
4. Ensure that all bolts, nuts and screws are tightened and ensure that all tools, gloves, etc. are removed from unit.
5. Replace side blower access panel before Start–up.
6. During Start–up, listen for any unusual noises or vibrations.
7. Shut down the unit after it runs for a while and check the bearings and motor. If they feel hot, the belt tension may be too tight, bearings may be misaligned or not lubricated correctly, etc.
8. It is a good idea to retension a new belt after a run–in period of about 24 hours. A run–in period of overnight or during a lunch break is better than no run–in period at all.

Figure 16	Checking Pulley Alignment

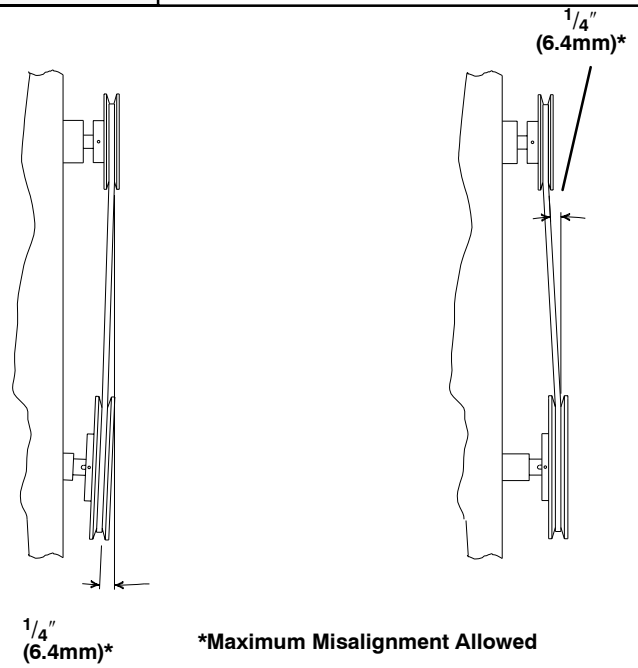

⚠ WARNING

ELECTRICAL SHOCK, FIRE AND/OR EXPLOSION HAZARD.

Failure to follow this warning could result in property damage, personal injury, and/or death.

Use extreme care during all of the following checks and procedures.

Make sure Electric Power is turned OFF as instructed in appropriate steps.

Check the unit's operation as outlined in the following instructions.

Blower and Phasing Check

1. Shut **OFF** electric power at unit disconnect.
2. Check to see that clean, properly sized air filters are installed.
3. Check to see that everything inside the unit is clear and ready to operate safely. Ensure that there are no objects in, on or around the motor, belt or blower wheel.
4. Set thermostat Heat-Cool selector to **OFF**.
5. Set thermostat fan switch to **AUTO**.

⚠ WARNING

MOVING PARTS HAZARD.

Failure to follow this warning could result in property damage, personal injury, and/or death.

Do NOT put hands or any other object in, on or around the motor, belt or blower wheel. Ensure that there are no objects in, on or around the motor, belt or blower wheel before turning electric power on.

6. Turn **ON** electric power. Nothing should start running. If any unusual arcing, odors or noises are encountered, shut **OFF** electric power immediately and check for wiring errors.

NOTE: The circulation blower motor and compressor(s) are three phase and are factory synchronized for proper rotation. For model PAS180, the unit is equipped with a phase protection device that will monitor the sequence of three phase electrical system to provide phase reversal protection. It will also monitor the three phase voltage inputs to provide a phase loss protection for the three phase device. If the device detects phase reversal or phase loss, it will bE indicated by a flashing red light on the Phase Monitor Relay located inside the control box (see component arrangement). For models PAS240 and PAE180/240 it is necessary to check for improper phasing. The following steps must be performed to verify correct electrical phasing.

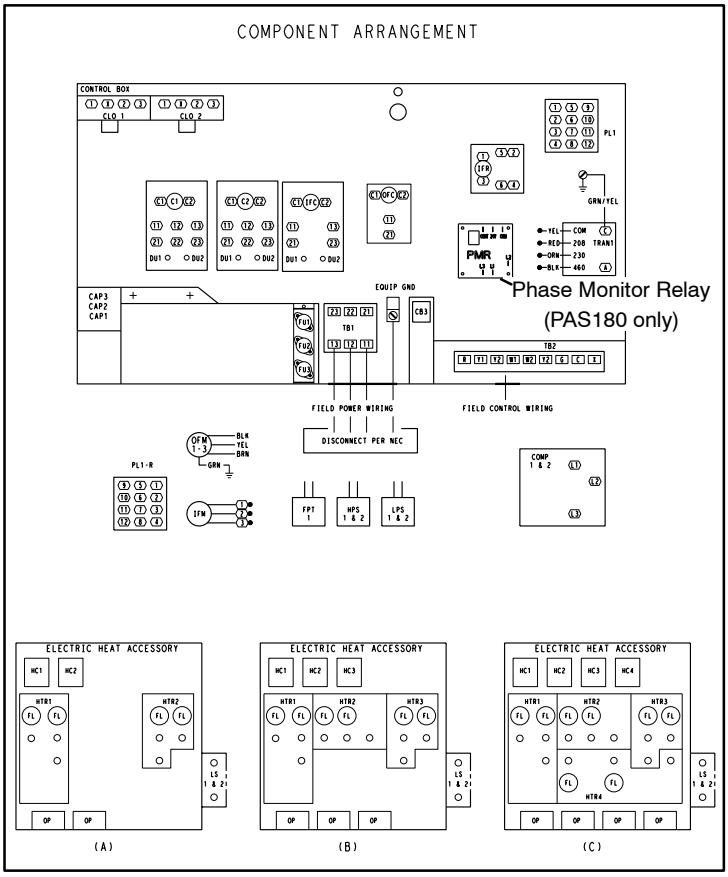

NOTE:

Do NOT operate the unit with the compressor(s) running until proper blower rotation has been confirmed by running the following test.

7. Set thermostat fan switch to **ON**. The circulating air blower should come **ON.**
8. Shut **OFF** electric power at unit disconnect and visually observe the direction of the blower rotation as it slows down. Do **NOT** put hands or any other object in, on or around the belt, motor or blower wheel.

⚠ CAUTION

RISK OF REDUCED EQUIPMENT LIFE

Failure to follow this Caution could result in premature equipment failure.

If blower rotation is incorrect, shut electric power OFF at unit disconnect and reverse any two supply wires at field connections ONLY. Do NOT reverse the blower and/or compressor leads or rewire any internal wiring. After rewiring is done, repeat blower rotation check to ensure that blower rotation is now correct.

9. If blower rotation is correct, reset thermostat fan switch to **AUTO**. The circulating air blower should go **OFF**. Nothing should be running.
10. Shut **OFF** electric power at unit disconnect.

Cooling Checks

1. Be sure that electric power is **OFF**.
2. To check cooling Stage 1, place jumper wires across low voltage terminal board terminals **R** to **G, R** to **Y1**.
3. Turn electric power **ON**. Check to see that the following occurs:
   a. Compressor 1 – **ON**
   b. Condenser fan motor(s) – **ON**
   c. Circulation air blower – **ON** with correct rotation and adequate airflow from ductwork.
4. Shut **OFF** electric power at unit disconnect.
5. To check cooling Stage 2, remove jumper wires from **Y1** and place it on **Y2**.

NOTE: Allow 5 minutes between Steps 4 and 6.

6. Turn **ON** electric power. Check to see that the following occurs:
   a. Compressors 1 & 2 – **ON**
   b. Condenser fan motor(s) – **ON**
   c. Circulation air blower – **ON**
7. Shut **OFF** electric power at unit disconnect**.**
8. Remove jumpers from low voltage terminal board.
9. Replace all service access panels.

Operation And Maintenance Instructions

⚠ WARNING

ELECTRICAL SHOCK HAZARD.

Turn off electric power supply at disconnect switch or service panel before removing any access or service panel from unit.

Failure to follow this warning could result in property damage, personal injury, and/or death.

Starting the Unit After Shutdown

Cooling

⚠ CAUTION

RISK OF REDUCED EQUIPMENT LIFE

Failure to follow this Caution could result in premature component failure.

To prevent possible damage to the compressor(s), do NOT operate on cooling when outdoor temperature is below 35°F (2°C).

1. Turn **ON** electric power.
2. Set thermostat to desired temperature and set system switch to **COOL**. The unit will come on and operate automatically under control of the thermostat.

   Close all doors and windows. The unit may run continuously for several hours or longer on the initial run because of residual heat and moisture in the building. This is normal for any air conditioning system.

Thermostat Fan Switch Operation

The circulating air blower will run continuously with the fan selector switch in the **ON** position . When the fan selector switch is in the **AUTO** position, the blower will run during each heating or cooling cycle.

Monthly Maintenance and Inspection Checks

Air Filters (Factory Installed)

NOTE:

Do NOT operate unit without all air filters installed in the unit.

Dirty filters are the most common cause of compressor failures and inadequate heating and cooling performance.
Inspect filters at least monthly and replace or clean as required.
Install filters so that the arrows on the side point in the direction of air flow.

Filter racks are accessible through the filter access panel.

Disposable Replacement Filters

For all units: 4 filters 20″ x 20″ x 2″
4 filters 16″ x 20″ x 2″

Condenser Coil

Keep the condenser inlet and outlet area clean and free of leaves, grass clippings and other debris. Grass should be kept short in front of the condenser inlet. Shrubbery **MUST** be trimmed back so it is no closer than 30 inches (762 mm) to condenser coil.

Condensate Drain

Check for condensate drainage. Clean as required.

Annual Maintenance and Inspection

⚠ WARNING

ELECTRICAL SHOCK, FIRE AND EXPLOSION HAZARDS.

Failure to follow this warning could result in property damage, personal injury, and/or death.

Turn off electric power supply at disconnect switch or service panel and gas supply at manual shutoff valve before removing any access or service panel from unit.

The annual inspection should include cleaning as required to ensure efficient operation of the unit.

The condenser and evaporator fan motors have permanently sealed bearings, so no field lubrication is necessary.

Fan shaft bearings on the 15 ton units are permanently lubricated. No field lubrication is required. For 20 ton units, lubricate bearings at least every 6 months with suitable bearing grease. Extended grease line is provided for far side fan bearing (opposite drive side).

Evaporator-fan motor protection - A manual reset, calibrated trip, magnetic circuit breaker protects against overcurrent. Do not bypass connections or increase the size of the breaker to correct trouble. Determine the cause and correct it before resetting the breaker.

Circulating Air Blower

Visually inspect the blower wheel for accumulations of dirt or lint. Clean the compartment and the blower wheel. If accumulation is excessive on blower wheel or does not remove easily, it will be necessary to remove the blower assembly.

Evaporator Fan Service and Replacements - 15 Ton

NOTE: To remove belts only, follow Steps 1-6. **See Figure 13.**

1. Remove filter and supply-air section panels.
2. Remove unit top panel.
3. Loosen carriage nuts A and B holding motor mount assembly to fan scroll side plates.
4. Loosen screw C.
5. Rotate motor mount assembly (with motor attached) as far as possible away from evaporator coil.
6. Remove belt.
7. Rotate motor mount assembly back past original position toward evaporator coil.
8. Remove motor mounting nuts D and E (both sides).
9. Lift motor up through top of unit.
10. Reverse above procedure to reinstall motor.
11. Check and adjust belt tension as necessary.

Evaporator Fan Service and Replacements - 20 Ton

The 20 ton units use a fan motor mounting system that features a slide-out motor mounting plate. To replace or service the motor, slide out the bracket. **See Figure 14.**

1. Remove the evaporator-fan access panel and the heating control access panel.
2. Remove the center post (located between the evaporator fan and heating control access panels) and all screws securing it.
3. Loosen nuts on the two carriage bolts in the motor mounting base.
4. Using jacking bolt under motor base, raise motor to top of slide and remove belt. Secure motor in the position by tightening the nuts on the carriage bolts.
5. Remove the belt drive.
6. Remove jacking bolt and tapped jacking bolt plate.
7. Remove the 2 screws that secure the motor mounting plate to the motor support channel.
8. Remove the 3 screws from the end of the motor support channel that interfere with the motor slide path.
9. Slide out the motor and motor mounting plate.
10. Disconnect wiring connections and remove the 4 mounting bolts.
11. Remove the motor.
12. To install the new motor, reverse steps 1 - 11.

Heating Checks When Accessory Electric Heater is installed

1. To start unit, turn on main power supply.
2. Set thermostat at HEAT position and a setting above room termperature, and set fan at AUTO position. Upon a call for heating through terminal W1, IFC and heater contactor no. 1 (HC1) are energized. On units equipped for 2 stages of heat, when additional heat is needed HC2 is energized through W2.
3. If unit does not energize, reset limit switch (located on evaporator-fan scroll) by pressing button located between terminals on the switch.

Turning Off the Unit

Heating

1. Set system selector switch at OFF position. Resetting heating selector lever below room temperature will shut unit off temporarily until space termperature falls below thermostat setting.

Cooling

1. Set thermostat selector to **OFF** and fan switch to **AUTO**.
2. To shut the unit down completely, shut **OFF** electric power supply at disconnect switch or service panel.

TROUBLESHOOTING - Cooling Service

PROBLEM	CAUSE	REMEDY
Compressor and condenser fans will not start.	Power failure	Call power company.
	Fuse blown or circuit breaker tripped.	Replace fuse or reset circuit breaker.
	Defective thermostat, contactor, transformer, or control relay.	Replace component.
	Insufficient line voltage.	Determine cause and correct.
	Incorrect or faulty wiring.	Check wiring diagram and rewire correctly.
	Thermostat setting too high.	Lower thermostat setting below room temperature.
(PAS180 ONLY) Compressor and condenser fans will not start.	Three phase power incorrectly connected. Indicated by flashing red LED on Phase Monitor Relay Board (PMR) inside control box.	Correct Field power phasing.
Compressor will not start but condenser fans run.	Faulty wiring or loose connections in compressor circuit.	Check wiring and repair or replace.
	Compressor motor burned out, seized, or internal overload open.	Determine cause. Replace compressor.
	Defective run/start capacitor, overload, or start relay.	Determine cause and replace.
	One leg of 3-phase power dead.	Replace fuse or reset circuit breaker.
Compressor cycles(other than normally satisfying thermostat).	Refrigerant overcharge or undercharge.	Recover refrigerant, evacuate system, and recharge to nameplate.
	Defective compressor	Replace and determine cause.
	Insufficient line voltage.	Determine cause and correct.
	Blocked condenser.	Determine cause and correct.
	Defective run/start capacitor, overload, or startrelay.	Determine cause and replace.
	Defective thermostat.	Replace thermostat.
	Faulty condenser-fan motor or capacitor	Replace.
	Restriction in refrigerant system.	Locate restriction and remove.
(PAS240, PAE180/240 Only) Compressor makes excessive noise (Scroll only)	Compressor rotating in wrong direction	Reverse the 3-phase power leads as described in Start-Up section
Compressor operates continuously.	Dirty air filter	Replace filter.
	Unit undersized for load	Decrease load or increase unit size
	Thermostat set too low.	Reset thermostat.
	Low refrigerant charge.	Locate leak, repair, and recharge.
	Leaking valves in compressor.	Replace compressor.
	Air in system	Recover refrigerant, evacuate system, and recharge.
	Condesor coil dirty or restricted.	Clean coil or remove restriction.
Excessive head pressure.	Dirty air filter	Replace filter.
	Dirty condenser coil.	Clean coil.
	Refrigerant overcharged.	Remove excess refrigerant.
	Air in system.	Recover refrigerant, evacuate system, and recharge.
	Condenser air restricted or air short-cycling.	Determine cause and correct.
Head pressure too low.	Low refrigerant charge	Check for leaks, repair, and recharge.
	Compressor valves leaking.	Replace compressor.
	Restriction in liquid tube.	Remove restriction.
Excessive suction pressure.	High heat load.	Check for source and eliminate.
	Compressor valves leaking.	Replace compressor.
	Refrigerant overcharged.	Recover excess refrigerant.
Suction pressure too low.	Dirty air filter.	Replace filter.
	Low refrigerant charge.	Check for leaks, repair, and recharge.
	Metering device or low side restricted.	Remove source of restriction.
	Insufficient evaporator airflow	Increase air quantity. Check filter and replace if necessary.
	Temperature too low in conditioned area.	Reset thermostat.
	Field-installed filter drier restricted.	Replace.
Compressor no. 2 will not run.	Unit in economizer mode.	Proper operation; no remedy necessary.

I. START-UP CHECKLIST (Remove and store in job file)		
	Model No:	Serial No:
	Date:	Technician:
	Unit No:	Job Location:
		Job Name:

II. PRE-START-UP (Insert Checkmark in box as each item is completed)		
		Verify that all packing materials have been removed from unit.
		Verify installation of indoor fan motor adjustment bolt and plate. (20 ton only)
		Verify that condensate connection is installed per installation instructions.
		Check all electrical connections and terminals for tightness.
		Check that indoor-air filters are clean and in place.
		Verify that unit installation is level.
		Check fan wheels and propellers for location in housing/orifice and setscrew tightness.
		Ensure belt tension is correct and blower pulleys are properly aligned.

III. START-UP				
ELECTRICAL				
	Supply Voltage	L1-L2	L2-L3	L3-L1
	Compressor AMPS	L1	L2	L3
	Compressor AMPS	L1	L2	L3
	Indoor-Fan AMPS	L1	L2	L3

TEMPERATURES and PRESSURES			
	Outdoor-Air Temperature	°DB	
	Return-Air Temperature	°DB	°WB
	Cooling Supply air	°DB	°WB
	Refrigerant Suction Pressure	PSIG-Circuit # 1	PSIG-Circuit # 2
	Refrigerant Temp. (Suction) Pressure	Circuit # 1	Circuit # 2
	Refrigerant Discharge	PSIG-Circuit # 1	PSIG-Circuit # 2
	Discharge Temperature	°F/C-Circuit # 1	°F/C-Circuit # 2

		Verify that 3-phase scroll compressor rotating in correct direction on select models.