Installation Instructions For Propane Gas Conversion (Kit Part No. NPLPCONV008A00) for Model PGN3, PGD3, WPG3 2 to 2-1/2 Ton Units

This kit is designed for conversion from Natural Gas to Propane Gas

NOTE: Read the entire instruction manual before starting the installation.

SAFETY CONSIDERATIONS

Installation and servicing of this equipment can be hazardous due to mechanical and electrical components. Only trained and qualified personnel should install, repair, or service this equipment.

Untrained personnel can perform basic maintenance functions such as cleaning and replacing air filters. All other operations must be performed by trained service personnel. When working on this equipment, observe precautions in the literature, on tags, and on labels attached to or shipped with the unit and other safety precautions that may apply.

Follow all safety codes. In the United States, follow all safety codes including the National Fuel Gas Code (NFGC) NFPA No. 54-2006/ANSI Z223.1-2006. In Canada, refer to the National Standard of Canada, Natural Gas and Propane Installation Codes (NSCNGPIC), CAN/CSA-B149.1-05.

Wear safety glasses, protective clothing, and work gloves. Have fire extinguisher available. Read these instructions thoroughly and follow all warnings or cautions included in literature and attached to the unit.

Recognize safety information. This is the safety-alert symbol ⚠ . When you see this symbol in instruction manuals be alert to the potential for personal injury.

Understand the signal words DANGER,WARNING, or CAUTION. These words are used with the safety-alert symbol. DANGER identifies the most serious hazards, those that will result in severe personal injury or death. WARNING signifies a hazard that could result in personal injury or death. CAUTION is used to identify unsafe practices that may result in minor personal injury or product and property damage. NOTE is used to highlight suggestions that will result in enhanced installation, reliability, or operation.

⚠ WARNING

FIRE, EXPLOSION, ELECTRICAL SHOCK, AND CARBON MONOXIDE POISONING HAZARD

This conversion kit shall be installed by a qualified service agency in accordance with the manufacturer's instructions and all applicable codes and requirements of the authority having jurisdiction. If the information in these instructions is not followed exactly, a fire, explosion, or production of carbon monoxide may result causing property damage, person injury, or loss of life. The qualified service agency is responsible for the proper installation of the kit. The installation is not proper and complete until the operation of the converted appliance is checked as specified in the manufactuerer's instructions supplied with the kit.

⚠ AVERTISSEMENT

LE FEU, L'EXPLOSION, CHOC ELECTRIQUE, ET MONOXYDE DE CARBONE EMPOISONNER

Cette trousse de conversion doit être installée par un servie d'entretien qualifié, selon les instructions du fabricant et selon toutes les exigences et tous les codes pertinents de l'autorité compétente. Assurezvous de bien suivre les instructions dans cette notice pour réduire au minimum le risque d'incendie, d'explosion ou la production de monoxyde de carbone pouvant causer des dommages matériels, de blessure ou la mort. Le service d'entretien qualifié est responsable de l'installation de cette trousse. L'installation n'est pas adéquate ni complète tant que le bon fonctionnement de l'appereil converti n'a pas été vérfié selon les instructions du fabricant fornies avec la trousse.

⚠ CAUTION

UNIT OPERATION HAZARD

Failure to follow this caution may result in damage to unit components.

Before converting a unit to propane gas, remove the burner assembly and inspect the heat exchanger tubes. If there are V-shaped NOx baffles installed in the firing tubes, (see Fig. 1.) THEY MUST BE REMOVED PRIOR TO CONVERTING THIS UNIT TO PROPANE. Discard the baffles after removal.

Figure 1 **Removing NOx Baffles**

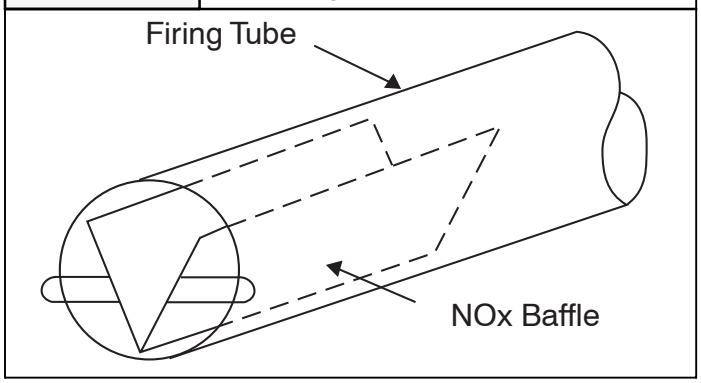

⚠ WARNING

EXPLOSION, FIRE, UNIT DAMAGE HAZARD

Failure to follow this warning could result in personal injury or death, and/or unit damage.

This unit is designed to operate at 3.5 in. wc (±0.3 in. wc) of manifold pressure with propane gas. Do not exceed this pressure.

INTRODUCTION

These instructions cover the installation of a propane conversion kit for PGN3, PGD3, and WPG3 models that are equipped with a White Rodgers combination automatic gas valve regulator.

DESCRIPTION AND USAGE

This kit is applicable to units with heating inputs from 40,000 to installed at altitudes up to 6000 ft (1829m). For units with heating inputs from 60,000 Btu/hr to 130,000 Btu/hr use propane conversion kit NPLPCONV006A00 (for 0 ft-2000 ft (610)) or NPLPCONV007A00 (for 2001 ft (610m) - 6000 ft. (1829m))

In the USA the input rating for altitudes above 2000 ft. (610m) must be reduced by 2 percent for each 1000 ft (305m) above sea level.

In Canada the input rating must be derated by 5 percent for altitudes of 2000 ft. (610m) to 4500 ft (1372m) above sea level.

INSTALLATION

⚠ WARNING

FIRE, EXPLOSION, ELECTRICAL HAZARD

Failure to follow this warning could result in personal injury, death or property damage.

Gas supply MUST be shut off before disconnecting electrical power and proceeding with conversion.

⚠ WARNING

ELECTRICAL SHOCK HAZARD

Failure to follow this warning could result in personal injury or death.

Before installing or servicing system, always turn off main power to system. There may be more than one disconnect switch. Tag disconnect switch with suitable warning label.

⚠ WARNING

EXPLOSION, FIRE, UNIT DAMAGE HAZARD

Failure to follow this warning could result in personal injury or death, and/or unit damage.

This unit is designed to operate at a minimum 10.0 in. wc of manifold pressure on high stage with propane gas. Refer to Table 4 for proper manifold pressure settings for high stage and low stage.

1. Turn off gas supply first, then power to unit.
2. Remove the front access panel from unit.
3. Disconnect the gas pipe from the gas valve.
4. Disconnect orange sparker cable from the sparker.
5. Disconnect yellow flame sensor wire from the flame sensor.
6. Remove the screw securing the brown wire from the burner assembly and the green wire form the induced-draft motor at the sheet metal partition. Save screw.
7. Disconnect the gray and brown wires from the gas valve, and remove blue wires from the rollout switch.
8. Remove the screw attaching the gas manifold to the basepan, and slide out the entire burner rack assembly from unit. Save screw.
9. Inspect the inlet of the heat exchanger tubes for presence of V-shaped NOx baffles (see Fig. 1). If baffles are present they must be removed prior to converting unit for propane gas. Slide the baffles out of the tubes (on some models a retaining clip must be released).

IMPORTANT: If it is expected that this unit will be converted back to natural gas at a later time, these baffles should be retained for reuse. Otherwise the baffles may be discarded.

Table 1 – Kit Contents

ITEM	Part Number	QTY
Propane Gas Orifice #50*	1176091	3
Propane Gas Orifice #52*	1176092	3
Burner Insert	48GS500465	2
Pressure Switch	KH022B008	1
Nipple, 2 in.	CA01CA010	1
Nipple, 2-1/2 in.	CA01CA014	1
90° Elbow, 1/8 in.	CA05RA001	2
Close Pipe Nipple	CA01CA001	1
Wire Assembly	99WK7373AC200615	1
Propane Conversion Label (Rating Plate)	48GS500614	1
Propane Conversion Label (Installer Responsibility)	48SS500283	1
Propane Conversion Warning Label (Gas Valve)	48GS500615	1

*Refer to Table 2 to determine the correct orifice to use.

10. Using a 5/16 in. nut driver, remove the four screws securing the manifold/gas valve assembly to the burner assembly. Save these screws.
11. Remove the natural gas orifices from the manifold using a 9/16 in. wrench and install the correct propane gas orifices in the manifold. See Table 2 to select correct orifice size based on input. See Fig. 2 for orifice installation.
12. Remove the two burners from the rack, save the screws. Remove the snap ring from the end of each burner. Install burner insert in the end of each burner with the flat sides of the square vertical and horizontal. Replace the snap ring to retain burner insert (See Fig. 2 for correct orientation). Replace the burners in the rack using the saved screws, making sure closed crossovers of burners are at each end.
13. Replace the manifold/gas valve assembly into the burner assembly using the four screws saved from Step 10.
14. Remove the plug on the inlet end of the gas valve using a 3/16 in. hex wrench.
15. Install the 1/8 in. close pipe where the plug was removed. (See Fig. 4.) Use sealant (field-supplied), making sure not to get any excess in the pipe or valve. Next, install a 1/8 in. elbow, a 1/8 in x 2-1/2 in. nipple, 1/8 in. x 2 in. nipple, and pressure switch as shown in Fig. 4.
16. Install the 6 in gray wire (in kit) on terminal 1 (M1) on the main gas valve and to the pressure switch (See Fig. 5.)
17. Reconnect the blue wires to the rollout switch and reinstall rollout switch.

18. Reconnect the gray wire removed form the gas valve in Step 7 to the other terminal on the pressure switch. Recconect the brown wire, removed in Step 7, to terminal 2 (C2) on the main gas valve.
19. Reconnect orange sparker cable and the yellow flame sensor wires at the ignition control.
20. Slide burner rack assembly into basepan. Align burner rack with screws on sheet metal partition and slide assembly back tight to the partition. Replace the screw attaching the burner rack to the basepan, removed in Step 8.
21. Reconnect the brown wire from the burner assembly and the green wire from the induced-draft motor to the sheet metal partition.
22. Remove the 1/8 in. pipe plug on the gas manifold and connect a pressure manometer.
23. Reconnect electrical power and gas supply to the unit.
24. Fire unit and verify proper ignition. Verify that the pressure reads 3.5 ±0.3 in. WC. If the pressure is outside this range, adjust the gas valve setting by removing the slotted brass fitting and turning the nylon adjustment screw. Replace brass fitting.
25. Turn off unit, remove pressure manometer and replace the 1/8 in. pipe fitting on the gas manifold .
26. Attach warning label (P/N 48GS500615) to visible side of gas valve.
27. Attach conversion label (P/N 48GS500614) above unit rating plate on exterior of unit.
28. Attach completed conversion responsibility label (see Fig. 3, P/N 48SS500283) inside service access panel.

IMPORTANT: Restart unit and leak check all gas connections including the main service connection, gas valve, gas spuds, and manifold pipe plug.

⚠ WARNING

FIRE AND EXPLOSION HAZARD

Failure to follow this warning could result in personal injury and/or death, and/or property damage.

NEVER use matches, candles, flame, or other sources of ignition to check for gas leakage. Use a soap-and-water solution to check for leaks.

29. After all leaks are eliminated, replace service panel.

Table 2 – Propane Gas Orifice Sizes

UNIT SIZES	PROPANE NOMINAL HEATING INPUT (BTUH)	NUMBER OF ORIFICES	GAS SUPPLY PRESSURE (IN. WC) (PROPANE)		MANIFOLD PRESSURE (IN. WC) (PROPANE)	PROPANE GAS ORIFICE PART NO. AND SIZE ALTITUDE (FT)	
			MIN	MAX		0-2000 (610m)	2001-6000 (610m-1829m)
024040 030040	40,000	2	7.0	13.0	3.5	1176091 No. 50	1176092 No. 52
024060 030060 036060 042060	57,000	THIS KIT APPLIES TO 40,000 BTUH MODELS ONLY. FOR ALL OTHER UNIT SIZES USE THE FOLLOWING KIT PART NUMBERS: NPLPCONV006A00 - STANDARD ALTITUDE PROPANE CONVERSION KIT (0-2000 FT (610m)) NPLPCONV007A00-HIGH ALTITUDE PROPANE CONVERSION KIT (2000 (610m)-6000 FT (1829m))					
036090 042090 048090 060090	85,500						
048115 060115	115,000						
048130 060130	127,000						

Figure 2 **Orifice Installation**

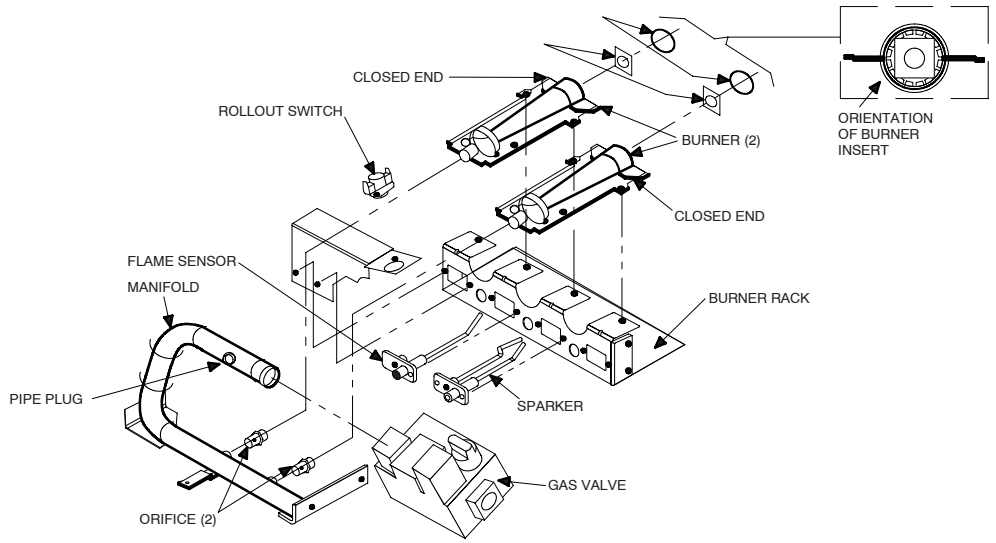

Figure 3 **Conversion Responsibility Label**

THIS APPLIANCE HAS BEEN CONVERTED
TO PROPANE GAS, KIT NO. _____
BY_____ DATE:_____
WHO ACCEPTS THE RESPONSIBILITY FOR
THE CORRECTNESS OF THIS CONVERSION.
48SS500283

Figure 4 **Installing Elbows, Nipples, and Pressure Switch**

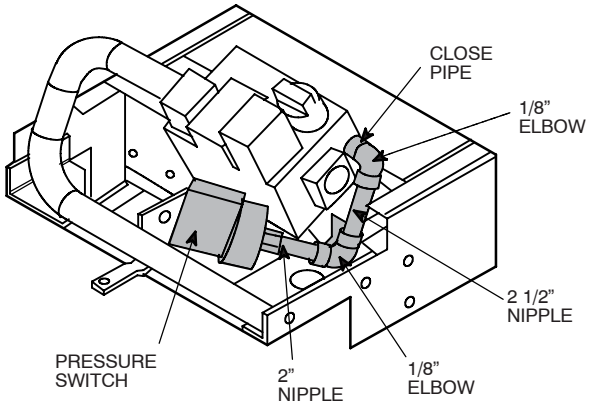

Figure 5 **Pressure Switch Wiring**

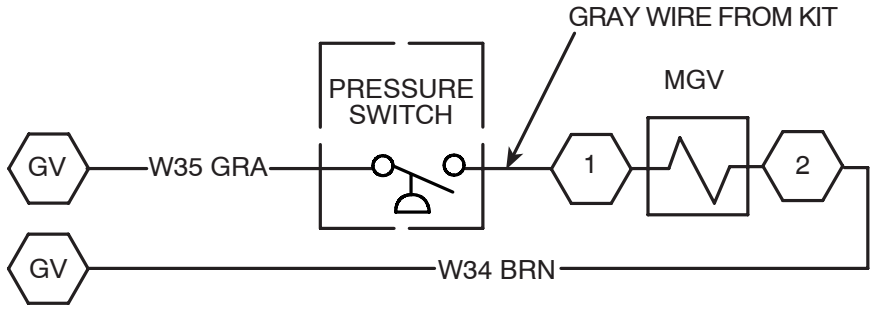

LEGEND

GV – Gas Valve
MGV – Main Gas Valve