# Installation Instructions For Propane Gas Conversion Kit Part No. NPLPCONV006A00, Standard Altitude Only 0-2,000 ft. Model PGN 2 to 5 Ton Units 60,000 to 130,000 Btu/hr

**This kit is designed for conversion from Natural Gas to Propane Gas**

**NOTE**: Read the entire instruction manual before starting the installation.

**SAFETY CONSIDERATIONS**

Installation and servicing of this equipment can be hazardous due to mechanical and electrical components. Only trained and qualified personnel should install, repair, or service this equipment.

Untrained personnel can perform basic maintenance functions such as cleaning and replacing air filters. All other operations must be performed by trained service personnel. When working on this equipment, observe precautions in the literature, on tags, and on labels attached to or shipped with the unit and other safety precautions that may apply.

Follow all safety codes. Installation must be in compliance with local and national building codes. Wear safety glasses, protective clothing, and work gloves. Have fire extinguisher available. Read these instructions thoroughly and follow all warnings or cautions included in literature and attached to the unit.

Recognize safety information. This is the safety-alert symbol ⚠. When you see this symbol in instruction manuals be alert to the potential for personal injury.
Understand the signal words DANGER,WARNING, or CAUTION. These words are used with the safety-alert symbol. DANGER identifies the most serious hazards, those that will result in severe personal injury or death. WARNING signifies a hazard that could result in personal injury or death. CAUTION is used to identify unsafe practices that may result in minor personal injury or product and property damage. NOTE is used to highlight suggestions that will result in enhanced installation, reliability, or operation.

Follow all safety codes. Wear safety glasses and work gloves. Have a fire extinguisher available.

## ⚠ WARNING

**PERSONAL INJURY, PROPERTY DAMAGE HAZARD**

Failure to follow this warning could result in personal injury, death or property damage.

This conversion kit shall be installed by a qualified service agency in accordance with the manufacturer's instructions and all applicable codes and requirements of the authority having jurisdiction and in Canada, in accordance with the CAN/CGA (Canadian Gas Association) B149.2 Installation Code. If the information in these instructions is not followed exactly, a fire, explosion or production of carbon monoxide may result causing personal injury, loss of life, and/or property damage. The qualified service agency is responsible for the proper installation of this kit. The installation is not proper and complete until the operation of the converted furnace is checked as specified in the manufacturer's instructions supplied in the kit.

## ⚠ AVERTISSEMENT

**LE FEU, L'EXPLOSION, CHOC ELECTRIQUE, ET MONOXYDE DE CARBONE EMPOISONNER**

Cette trousse de conversion doit être installée par un servie d'entretien qualifié, selon les instructions du fabricant et selon toutes les exigences et tous les codes pertinents de l'autorité compétente. Assurezvous de bien suivre les instructions dans cette notice pour réduire au minimum le risque d'incendie, d'explosion ou la production de monoxyde de carbone pouvant causer des dommages matériels, de blessure ou la mort. Le service d'entretien qualifié est responsable de l'installation de cette trousse. L'installation n'est pas adéquate ni complète tant que le bon fonctionnement de l'appereil converti n'a pas été vérfié selon les instructions du fabricant fornies avec la trousse.

## ⚠ CAUTION

**UNIT OPERATION HAZARD**

Failure to follow this caution may result in damage to unit components.

Before converting a unit to propane gas, remove the burner assembly and inspect the heat exchanger tubes. If there are V-shaped NOx baffles installed in the firing tubes, (see Fig. 1.) THEY MUST BE REMOVED PRIOR TO CONVERTING THIS UNIT TO PROPANE. Discard the baffles after removal.

**Figure 1** **Removing NOx Baffles**

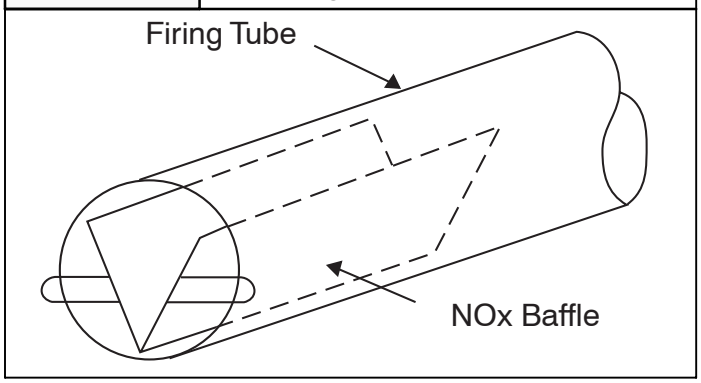


## ⚠ WARNING

**EXPLOSION, FIRE, UNIT DAMAGE HAZARD**

Failure to follow this warning could result in personal injury or death, and/or unit damage.

This unit is designed to operate at 3.5 in. wc (±0.3 in. wc) of manifold pressure with propane gas. Do not exceed this pressure.



462 06 1901 00
8/28/06

## INTRODUCTION

These instructions cover the installation of a propane conversion kit for PGN3 models that are equipped with a White Rodgers combination automatic gas valve regulator.

## DESCRIPTION AND USAGE

This kit is applicable to units with heating inputs from 60,000 to 130,000 Btu/hr installed at standard altitudes from 0 ft to 2000 ft. It cannot be used for standard altitude installations or on units with heating inputs of 40,000Btu/hr. Standard altitude conversion (2001-6000 ft) must use kit NPLPCONV007A00. All conversions of 40,000 Btu/hr units should use Kit # NPLPCONV008A00 (applicable for any altitude from 0 ft to 6000 ft).

## INSTALLATION

**⚠ WARNING**

**FIRE, EXPLOSION, ELECTRICAL HAZARD**

Failure to follow this warning could result in personal injury, death or property damage.

Gas supply MUST be shut off before disconnecting electrical power and proceeding with conversion.

**⚠ WARNING**

**ELECTRICAL SHOCK HAZARD**

Failure to follow this warning could result in personal injury or death.

Before installing or servicing system, always turn off main power to system. There may be more than one disconnect switch. Tag disconnect switch with suitable warning label.

1. Turn off gas supply first, then power to unit.
2. Remove the front access panel from unit.
3. Disconnect the gas pipe from the gas valve.
4. Disconnect orange sparker cable at the ignition control.
5. Disconnect yellow flame sensor wire from the flame sensor.
6. Remove the screw securing the brown wire from the burner assembly and the green wire form the induced-draft motor at the sheet metal partition. Save screw.
7. Disconnect the gray and brown wires from the gas valve, and remove blue wires from the rollout switch.
8. Remove the screw attaching the gas manifold to the basepan, and slide out the entire burner rack assembly from unit. Save screw.
9. Inspect the inlet of the heat exchanger tubes for presence of V-shaped NOx baffles (see Fig. 1). If baffles are present they must be removed prior to converting unit for propane gas. Slide the baffles out of the tubes (on some models a retaining clip must be released).

**IMPORTANT**: If it is expected that this unit will be converted back to natural gas at a later time, these baffles should be retained for reuse. Otherwise the baffles may be discarded.

**Table 1 – Kit Contents**

| ITEM | QUANTITY |
|---|---|
| Propane Gas Orifice #41* | 3 |
| Propane Gas Orifice #42* | 3 |
| Propane Gas Orifice #46* | 3 |
| Conversion Label | 1 |
| Responsibility Label | 1 |
| Warning Label | 1 |

*Refer to Table 2 to determine the correct orifice to use.

10. Using a 5/16 in. nut driver, remove the four screws securing the manifold/gas valve assembly to the burner assembly. Save these screws.
11. Remove the natural gas orifices from the manifold using a 9/16 in. wrench and install the correct propane orifices in the manifold. See Table 2 to select correct orifice size based on input. See Fig. 4 for orifice installation.
12. Replace the manifold/gas valve assembly into the burner assembly using the four screws saved from Step 10.
13. Reconnect the blue wires to the rollout switch and reinstall rollout switch.
14. Reconnect the gray wire removed in Step 7 to terminal (M1) of the gas valve. Reconnect the brown wire to terminal 2 (C2) on the main gas valve.
15. Reconnect orange sparker cable and the yellow flame sensor wires at the ignition control.
16. Slide burner rack assembly into basepan. Align burner rack with screws on sheet metal partition and slide assembly back tight to the partition. Replace the screw attaching the burner rack to the basepan, removed in Step 8.
17. Reconnect the brown wire from the burner assembly and the green wire from the induced-draft motor to the sheet metal partition.
18. Remove the 1/8 in. pipe plug on the gas manifold and connect a pressure manometer.
19. Reconnect electrical power and gas supply to the unit.
20. Fire unit and verify proper ignition. Verify that the pressure reads 3.5 in. " 0.3 in. wc. If the pressure is outside this range, adjust the gas valve setting by removing the slotted brass fitting and turning the nylon adjustment screw. Replace brass fitting.
21. Turn off unit, remove pressure manometer and replace the 1/8 in. pipe fitting on the gas manifold .
22. Attach warning label (P/N 500615) to visible side of gas valve.
23. Attach conversion label (P/N 500614) above unit rating plate on exterior of unit.
24. Attach completed conversion responsibility label (see Fig. 2, P/N 500283) inside service access panel.

**IMPORTANT**: Restart unit and leak check all gas connections including the main service connection, gas valve, gas spuds, and manifold pipe plug.

**⚠ WARNING**

**FIRE AND EXPLOSION HAZARD**

Failure to follow this warning could result in personal injury and/or death, and/or property damage.

NEVER use matches, candles, flame, or other sources of ignition to check for gas leakage. Use a soap-and-water solution to check for leaks.

25. After all leaks are eliminated, replace service panel.

**Table 2 – Propane Gas Orifice Sizes**

| UNIT SIZES | PROPANE NOMINAL HEATING INPUT (BTUH) | NUMBER OF ORIFICES | GAS SUPPLY PRESSURE (IN. WC) (PROPANE) | | MANIFOLD PRESSURE (IN. WC) (PROPANE) | PROPANE ORIFICE PART NO. AND SIZE ALTITUDE (FT) | |
|---|---|---|---|---|---|---|---|
| | | | MIN | MAX | | 0-2000 | 2001-6000 |
| 024040<br>030040 | 40,000 | THIS KIT APPLIES TO MODELS WITH HEATING INPUT OF 60,000 BTUH AND HIGHER, FOR 40,000 BTUH MODELS USE KIT # NPLPCONV008A00 | | | | | |
| 024060<br>030060<br>036060<br>042060 | 57,000 | 2 | 4.0 | 13.0 | 3.5 | 1176097<br>No. 46 | THIS KIT APPLIES TO STANDARD ALTITUDE INSTALLATIONS ONLY. ABOVE 2000 FT USE HIGH ALTITUDE PROPANE CONVERSION KIT # NPLPCONV00A00 |
| 036090<br>042090<br>048090<br>060090 | 85,500 | 3 | 4.0 | 13.0 | 3.5 | 1176097<br>No. 46 | |
| 048115<br>060115 | 115,000 | 3 | 4.0 | 13.0 | 3.5 | 1176095<br>No. 42 | |
| 048130<br>060130 | 127,000 | 3 | 4.0 | 13.0 | 3.5 | 1172236<br>No. 41 | |

**Figure 2** **Conversion Responsibility Label**

THIS APPLIANCE HAS BEEN CONVERTED
TO LP. GAS. KIT NO. _____
BY _____ DATE: _____
WHO ACCEPTS THE RESPONSIBILITY FOR
THE CORRECTNESS OF THIS CONVERSION.
48SS500283

**Figure 3** **Burner Bracket**

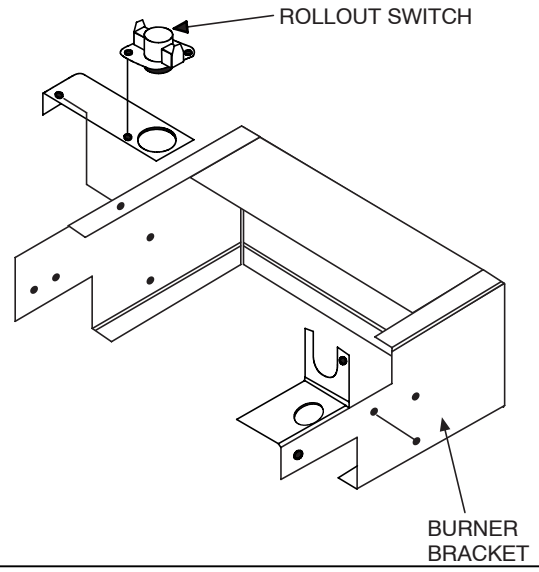

| Figure 4 | Orifice Installation |
|---|---|

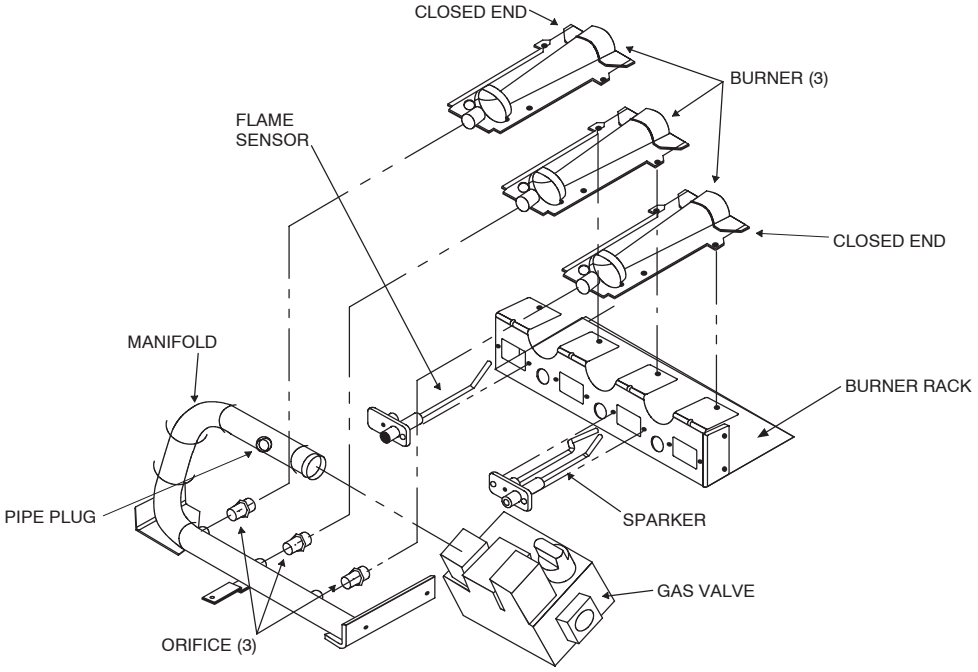


**85,500 BTUH TO 127,000 BTUH UNITS**

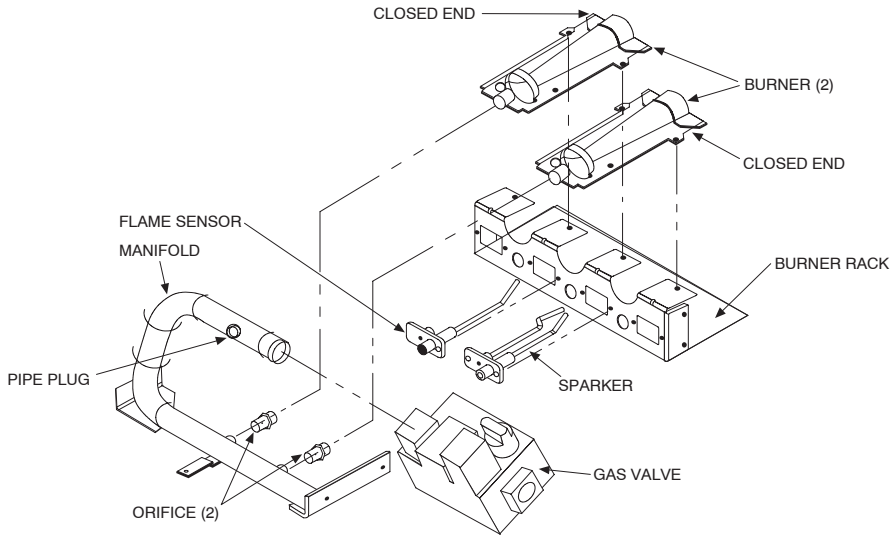


**57,000 BTUH UNITS**