INSTALLATION INSTRUCTIONS
NATURAL GAS to PROPANE GAS CONVERSION KIT
Condensing and Non–Condensing Gas Furnaces
(F/G)9MAC, (F/G)9MAE, (F/G)9MVT, (F/G)9MVE, (F/G)9MXT, (F/G)8MVL, (F/G)8MTL
NAHB01001LP

NOTE: Read the entire instruction manual before starting the installation.

SAFETY CONSIDERATION

⚠ WARNING

FIRE, EXPLOSION, ELECTRICAL SHOCK, AND CARBON MONOXIDE POISONING HAZARD

Failure to follow this warning could result in personal injury or death.

This conversion kit shall be installed by a qualified service agency in accordance with the manufacturer's instructions and all applicable codes and requirements of the authority having jurisdiction. If the information in these instructions is not followed exactly, a fire, explosion, or production of carbon monoxide could result causing property damage, personal injury, or loss of life. The qualified service agency is responsible for the proper installation of this furnace with this kit. The installation is not proper and complete until the operation of the converted appliance is checked as specified in the manufacturer's instructions supplied with the kit.

⚠ AVERTISSEMENT

LE FEU, L'EXPLOSION, CHOC ELECTRIQUE, ET MONOXYDE DE CARBONE EMPOISONNER

Cette trousse de conversion doit être installée par un servie d'entretien qualifié, selon les instructions du fabricant et selon toutes les exigences et tous les codes pertinents de l'autorité compétente. Assurezvous de bien suivre les instructions dans cette notice pour réduire au minimum le risque d'incendie, d'explosion ou la production de monoxyde de carbone pouvant causer des dommages matériels, de blessure ou la mort. Le service d'entretien qualifié est responsable de l'installation de cette trousse. L'installation n'est pas adéquate ni complète tant que le bon fonctionnement de l'appereil converti n'a pas été vérfié selon les instructions du fabricant fornies avec la trousse.

Installing and servicing heating equipment can be hazardous due to gas and electrical components. Only trained and qualified personnel should install, repair, or service heating equipment.

Untrained personnel can perform basic maintenance functions such as cleaning and replacing air filters. Trained service personnel must perform all other operations. When working on heating equipment, observe precautions in the literature, on tags, and on labels attached to or shipped with the unit, and other safety precautions that may apply.

Follow all safety codes. In the United States, follow all safety codes including the current edition of the National Fuel Gas Code (NFGC) NFPA No. 54/ANSI Z223.1. In Canada, refer to the current edition of the National Standard of Canada, Natural Gas and Propane Installation Codes (NSCNGPIC), CAN/CSA–B149.1 and .2. Wear safety glasses and work gloves. Have a fire extinguisher available during start–up, adjustment steps, and service calls.

Recognize safety information. This is the safety–alert symbol ⚠. When you see this symbol on the furnace and in instructions or manuals, be alert to the potential for personal injury. Understand the signal words DANGER, WARNING, CAUTION and NOTE. The words DANGER, WARNING, and CAUTION are used with the safety alert symbol. DANGER identifies the most serious hazards which **will** result in severe personal injury or death. WARNING signifies a hazard which **could** result in personal injury or death. CAUTION is used to identify unsafe practices which **may** result in minor personal injury or product and property damage. NOTE is used to highlight suggestions which **will** result in enhanced installation, reliability, or operation.

INTRODUCTION

⚠ WARNING

FIRE, EXPLOSION, ELECTRICAL SHOCK AND CARBON MONOXIDE POISONING HAZARD

Failure to follow instructions could result in personal injury, death or property damage.

Improper installation, adjustment, alteration, service, maintenance, or use can cause carbon monoxide poisoning, explosion, fire, electrical shock, or other conditions, which could result in personal injury or death. Consult your distributor or branch for information or assistance. The qualified installer or agency must use only factory–authorized kits or accessories when servicing this product.

⚠ WARNING

FIRE, EXPLOSION, ELECTRICAL SHOCK HAZARD

Failure to follow this warning could result in personal injury, death or property damage.

Gas supply MUST be shut off before disconnecting electrical power and proceeding with conversion.

⚠ WARNING

ELECTRICAL SHOCK, FIRE OR EXPLOSION HAZARD

Failure to follow this warning could result in personal injury, death or property damage.

Before installing, modifying, or servicing system, main electrical disconnect switch must be in the OFF position and install a lockout tag. There may be more than one disconnect switch. Lock out and tag switch with a suitable warning label. Verify proper operation after servicing.

This instruction covers the installation of gas conversion kit Part No. NAHB01001LP to convert the following furnaces from natural gas usage to propane gas usage. See appropriate section for your furnace type.

Section 1—(F/G)9MAC, (F/G)9MAE, (F/G)9MVT, (F/G)9MVE, & (F/G)9MXT 4-Way Multipoise, Hot Surface Ignition, Modulating Variable–Speed, Two–Stage Variable–Speed and Two–Stage ECM Blower Motor Condensing Furnaces.

Section 2—(F/G)8MVL & (F/G)8MTL, 33.3–In. High, Induced–Combustion, Hot–Surface Ignition, Two-Stage, Variable-Speed, Non-Condensing Furnaces.

DESCRIPTION AND USAGE

This kit is designed for use in the furnaces listed below. See Table 1 for kit contents. To accommodate many different furnace models, more parts are shipped in kit than will be needed to complete conversion. When installation is complete, discard extra parts.

Table 1	NAHB01001LP Contents
QUANTITY	**DESCRIPTION**
1	VALVE CVRSN KIT - W/R F92-102100
2	VALVE CVRSN KIT - W/R SPRING 92-0659
7	ORIFICE - #54
7	ORIFICE - #55
7	ORIFICE - #56
7	ORIFICE - 1.25mm
7	ORIFICE - 1.30mm
7	SCREW - SPOILER
7	SCREW - HEX HD 8AB 3/4
1	CONNECTOR - BRASS 1/8” NPT X2”
1	CONNECTOR,SPLC - 3/16”
1	CONNECTOR-1/4QC ME BOTH ENDS
1	ELBOW, STREET - 150# 1/8” NPT
1	ELBOW, STREET - BRASS 1/8” NPT
1	NIPPLE - HEX (BRASS)
1	SWITCH, PRESSURE
1	TEE - MALE BRANCH (BRASS)
1	TEE, STREET - MALE BRANCH (BRASS)
1	BIT, DRILL 7/64” CONDENSING
1	BIT, DRILL 5/64” NON–CONDENSING
1	WIRE ASSY - ORANGE
1	WIRE ASSY - ORANGE
2	WIRE ASSY - ORANGE
1	WIRE ASSY - YELLOW
1	WIRE ASSY - YELLOW
1	WIRE ASSY
1	WIRE ASSY
1	LABEL 339268-201
1	LABEL 339268-202
1	LABEL 339268-203
1	LABEL 339268-204
1	LABEL 339268-205
1	LABEL 339268-206
1	LABEL 339268-209 (FRENCH)
1	LABEL 339268-211 (FRENCH)
1	LABEL 339268-214 (FRENCH)
1	INSTRUCTIONS

SECTION 1
CONDENSING FURNACES

MODEL NUMBERS BEGINNING WITH:		
(F/G)9MAC	(F/G)9MVT	(F/G)9MXT
(F/G)9MAE	(F/G)9MVE	

INSTALLATION

1. Set room thermostat to lowest setting or “OFF”.
2. Remove outer doors.
3. Disconnect power at external disconnect, fuse or circuit breaker.
4. Turn off gas at external shut-off or gas meter.
5. Remove outer doors and set aside.
6. Turn electric switch on gas valve to OFF.

Figure 1 | **Representative Furnace Drawing**

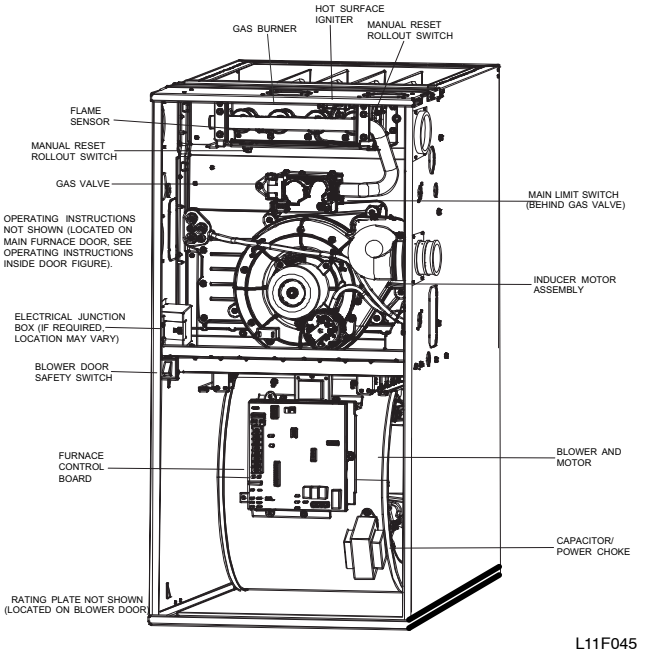

REPRESENTATIVE DRAWING ONLY, SOME MODELS MAY VARY IN APPEARANCE.

MANIFOLD/ORIFICE/BURNER REMOVAL

⚠ CAUTION

UNIT OPERATION HAZARD

Failure to follow this caution may result in unit damage or improper operation.

Label all wires prior to disconnection when servicing controls.

⚠ PRUDENCE

D’EQUIPEMENT D’OPERATION

Toute erreur de câblage peut être une source de danger et de panne.

Lors des opérations d’entretien des commandes, étiqueter tous les fils avant de les déconnecter.

NOTE: Use a back-up wrench on the gas valve to prevent the valve from rotating on the manifold or damaging the mounting to the burner box.

1. Disconnect the gas pipe from gas valve and remove pipe from the furnace casing.
2. Disconnect the connector harness from gas valve. Disconnect wires from Hot Surface Igniter (HSI) and Flame Sensor.
3. Support the manifold and remove the four (4) screws that secure the manifold assembly to the burner box and set aside.
4. Note the location of the green/yellow wire ground wire for re-assembly later. (See **Figure 2**)
5. Slide one−piece burner assembly out of slots on sides of burner box. (See **Figure 3**)
6. Remove the flame sensor from the burner assembly.
7. Remove the orifices from the manifold and discard.

Figure 2 | **Gas Valve with Orifices**

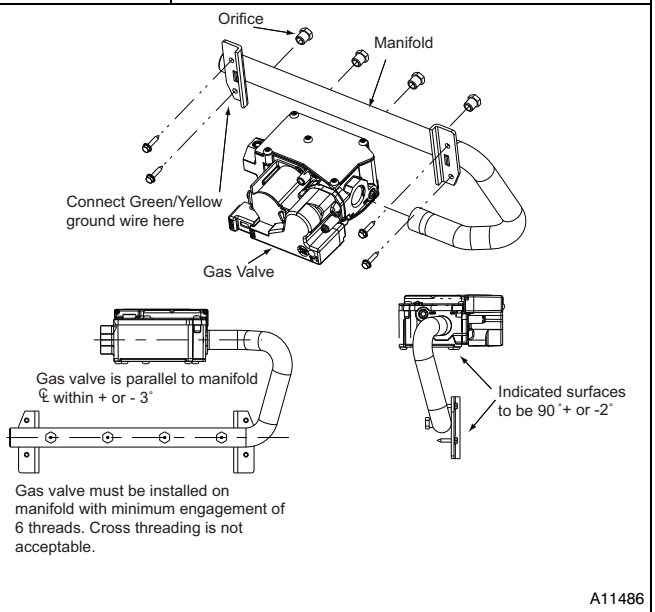

REPRESENTATIVE DRAWING ONLY, SOME MODELS MAY VARY IN APPREARANCE.

Figure 3 | **Burner Assembly**

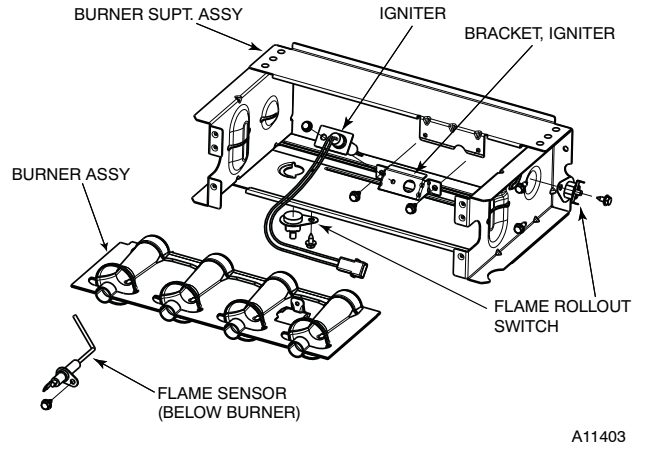

ORIFICE SELECTION/DERATE

⚠ CAUTION

UNIT DAMAGE HAZARD

Failure to follow this caution may result in unit damage.

DO NOT re−drill burner orifices. Improper drilling may result in burrs, out−of−round holes, etc. Obtain new orifices if orifice size must be changed. (See **Figure 4**)

Figure 4 | **Burner Orifice**

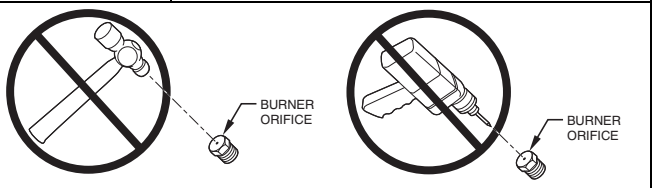

Refer to conversion kit rating plate 339268−201 or 339268−206 to determine main burner orifice size. (See **Figure 6**)

Furnace gas input rate on furnace rating plate is for installations at altitudes up to 2000 ft.

In the U.S.A.; the input rating for altitudes above 2000 ft. must be reduced by 2 percent for each 1000 ft. above sea level.

In Canada, the input rating must be derated by 5 percent for altitudes of 2000 ft. to 4500 ft. above sea level.

The Conversion Kit Rating Plate accounts for high altitude derate.

INSTALL ORIFICES

1. Install main burner orifices. Do not use Teflon tape. Finger−tighten orifices at least one full turn to prevent cross−threading, then tighten with wrench.
2. There are enough orifices in each kit for largest furnace. Discard extra orifices.

NOTE: DO NOT reinstall the manifold at this time.

INSTALL MIXER SCREWS

NOTE: There are two sets of mixer screws. One set is for Condensing gas furnaces, the other set is for Non-condensing gas furnaces. Use only the parts in the bag marked **"REQUIRED FOR THE CONVERSION OF CONDENSING GAS FURNACES TO PROPANE GAS"**

See **Figure 5** to verify you have the correct set of mixer screws.

Figure 5 | **Gas Conversion Kit**

337932-701

PART #	CONTAINS: DESCRIPTION	QTY
328456-402	BIT, DRILL	1
FAJ5812B	SCREW	7

REQUIRED FOR CONVERSION OF CONDENSING GAS FURNACE TO PROPANE GAS.

A11294

1. Locate the dimple on each burner venturi tube. If you cannot locate the dimple, refer to **Figure 7** for location of the mixer screw.
2. Drill a 7/64–in. (2.8 mm) hole (supplied in kit) in each dimple.
3. Install a mixer screw in each drilled hole drilling as straight as possible. The screw head should be flush with the top of the burner venturi.

Figure 6 | **Conversion Kit Rating Plate – (F/G)9MAC & (F/G)9MAE**

CONVERSION KIT RATING PLATE - INTERNATIONAL COMFORT PRODUCTS, LLC U.S.A.

THIS APPLIANCE HAS BEEN CONVERTED TO USE PROPANE GAS FOR FUEL. REFER TO KIT INSTRUCTIONS FOR CONVERSION PROCEDURES. USE PARTS SUPPLIED BY MANUFACTURER AND INSTALLED BY QUALIFIED PERSONNEL.
SEE EXISTING RATING PLATE FOR APPLIANCE MODEL NO. AND INPUT RATING.

NOTE: Furnace gas input rate on rating plate is for installations up to 2000 ft. above sea level. In U.S.A. the input rating for altitudes above 2000 ft. must be derated by 2% for each 1000 ft. above sea level. In Canada the input rating must be derated by 5% for altitudes of 2000 ft. to 4500 ft. above sea level.

KIT NO.: NAHB01001LP SUPERSEDES: NAHA01001LP FUEL USED: PROPANE GAS INLET PRESSURE (min - max): 11.0 - 13.6 in. wc

APPLIANCE MODELS		ALTITUDE OF INSTALLATION (FT. ABOVE SEA LEVEL) U.S.A. *								
		0 to 2000	2001 * to 3000	3001 to 4000	4001 to 5000	5001 to 6000	6001 to 7000	7001 to 8000	8001 to 9000	9001 to 10000
*9MAC *9MAE	Orifice No.	1.25mm	1.25mm	1.25mm	1.25mm	1.25mm	1.25mm	1.25mm	1.25mm	1.25mm
		Manifold Pressure								
	MAX	11.0	11.0	11.0	11.0	11.0	11.0	11.0	11.0	11.0
	INT	5.8	5.5	5.5	5.5	5.4	5.4	5.4	5.3	5.3
	MIN	2.2	2.1	2.1	2.1	2.1	2.0	2.0	2.0	2.0

* For Canadian Installations from 2000 to 4500 ft. use U.S.A. column 2001 to 3000 ft.

339268-201 REV. A

Conversion Kit Rating Plate – (F/G)9MVT, (F/G)9MVE & (F/G)9MXT

CONVERSION KIT RATING PLATE - INTERNATIONAL COMFORT PRODUCTS, LLC U.S.A.

THIS APPLIANCE HAS BEEN CONVERTED TO USE PROPANE GAS FOR FUEL. REFER TO KIT INSTRUCTIONS FOR CONVERSION PROCEDURES. USE PARTS SUPPLIED BY MANUFACTURER AND INSTALLED BY QUALIFIED PERSONNEL.
SEE EXISTING RATING PLATE FOR APPLIANCE MODEL NO. AND INPUT RATING.

NOTE: Furnace gas input rate on rating plate is for installations up to 2000 ft. above sea level. In U.S.A. the input rating for altitudes above 2000 ft. must be derated by 2% for each 1000 ft. above sea level. In Canada the input rating must be derated by 5% for altitudes of 2000 ft. to 4500 ft. above sea level.

KIT NO.: NAHB01001LP SUPERSEDES: NAHA01001LP FUEL USED: PROPANE GAS INLET PRESSURE (min - max): 11.0 - 13.6 in. wc

APPLIANCE MODELS		ALTITUDE OF INSTALLATION (FT. ABOVE SEA LEVEL) U.S.A. *								
		0 to 2000	2001 * to 3000	3001 to 4000	4001 to 5000	5001 to 6000	6001 to 7000	7001 to 8000	8001 to 9000	9001 to 10000
*9MXT, *9MVT, *9MVE	Orifice No.	1.25mm	1.25mm	1.25mm	1.25mm	1.25mm	1.25mm	1.25mm	1.25mm	1.25mm
		Manifold Pressure								
	HIGH	11.0	11.0	11.0	11.0	11.0	11.0	11.0	11.0	11.0
	LOW	5.8	5.5	5.5	5.5	5.4	5.4	5.4	5.3	5.3

* For Canadian Installations from 2000 to 4500 ft. use U.S.A. column 2001 to 3000 ft.

339268-206 REV. A

Figure 7 | **Mixer Screw Location**

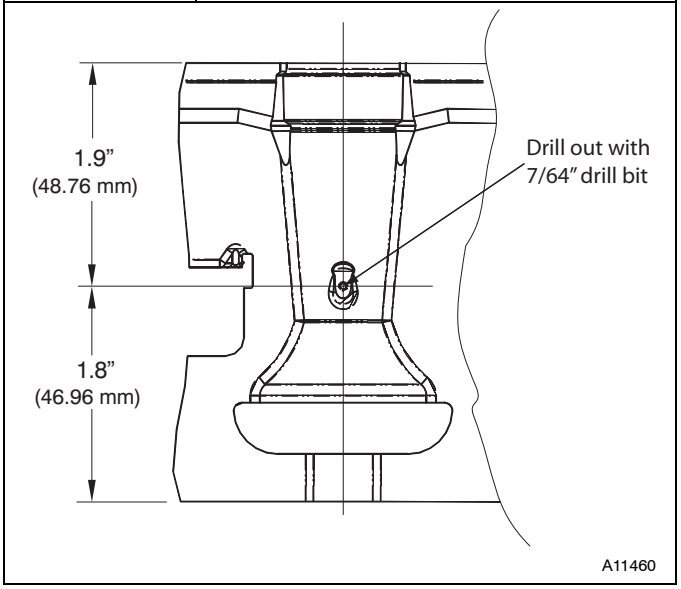

REINSTALL BURNER ASSEMBLY

To reinstall burner assembly:

1. Attach flame sensor to burner assembly.
2. Insert one–piece burner in slot on sides of burner box and slide burner back in place.
3. Reattach HSI wires to HSI.
4. Verify igniter to burner alignment. See **Figure 8** and **Figure 9**.

Figure 8 | **Igniter Position – Back View**

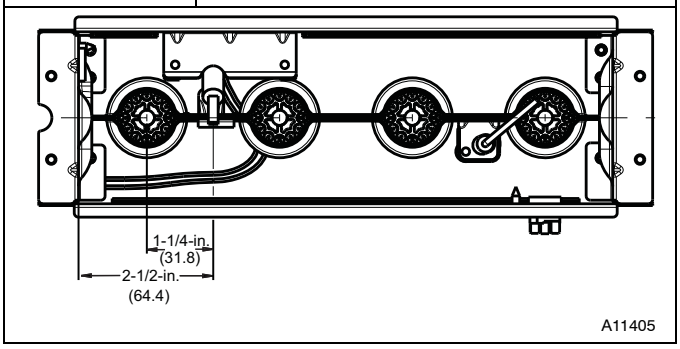

Figure 9	Igniter Position – Side View

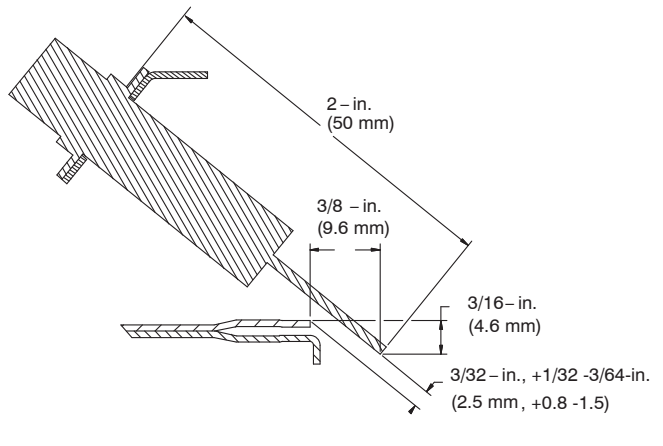

CONVERT GAS VALVES

CAUTION

UNIT DAMAGE HAZARD

Failure to follow this caution may result in unit damage.

The gas valve must be converted and pre–adjusted before operating on propane gas. If not converted and pre–adjusted, sooting and corrosion will occur leading to early heat exchanger failure.

WARNING

FIRE, EXPLOSION, ELECTRICAL SHOCK HAZARD

Failure to follow this warning could result in personal injury, death or property damage.

Gas supply MUST be shut off before disconnecting electrical power and proceeding with conversion.

WARNING

ELECTRICAL SHOCK, FIRE OR EXPLOSION HAZARD

Failure to follow this warning could result in personal injury, death or property damage.

Before installing, modifying, or servicing system, main electrical disconnect switch must be in the OFF position and install a lockout tag. There may be more than one disconnect switch. Lock out and tag switch with a suitable warning label. Verify proper operation after servicing.

(F/G)9MAC & (F/G)9MAE – Modulating Gas Valve

Refer to **Figure 10** and **Figure 11**.

Figure 10	Propane Jumper

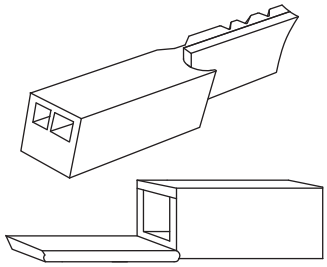

Figure 11	Installing Propane Jumper

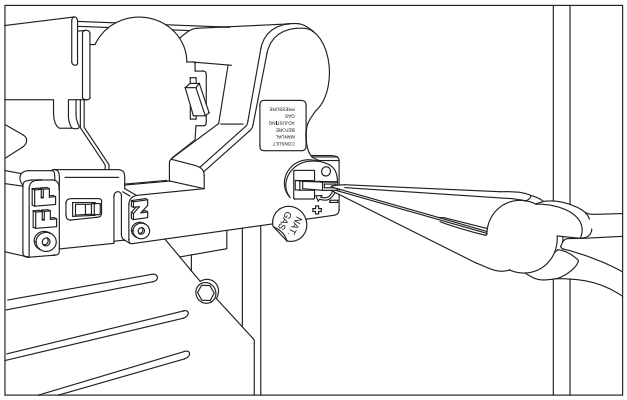

NOTE: The Propane jumper for the modulating gas valve is very small. Needle-nose pliers are required to insert the jumper into the valve. If the jumper is not installed, the valve will not operate properly on propane.

1. Locate the round **"NAT GAS"** sticker on the top of the gas valve.
2. Peel the sticker off and discard.
3. Note the small square opening in the top of the gas valve.
4. Note the two jumper pins inside the modulating gas valve.
5. Remove the small black plastic propane jumper from the envelope.
6. Use needle-nosed pliers to hold the jumper by the tab on the end.
7. Insert the jumper on the pins inside the gas valve.
8. Cover the opening in the gas valve with the label marked **"LP GAS"**

Figure 12	(F/G)9MAC & (F/G)9MAE – Redundant Automatic Control Valve (Modulating)

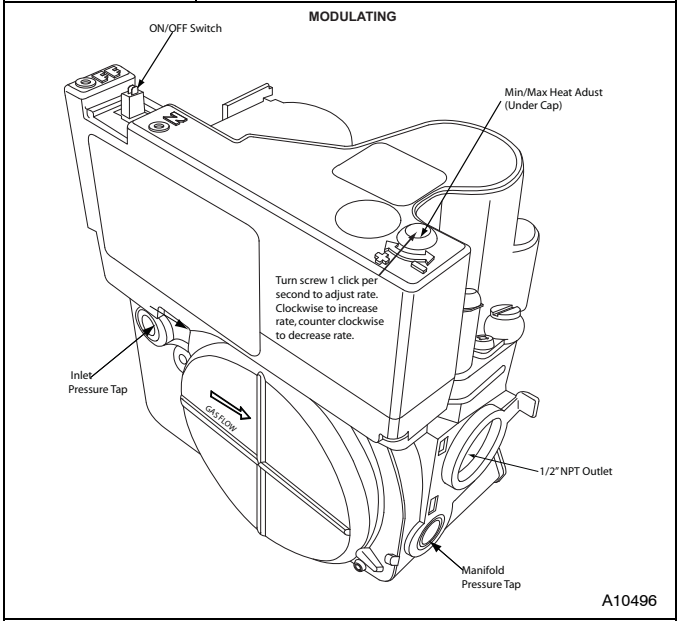

(F/G)9MVT, (F/G)9MVE & (F/G)9MXT – Two Stage Gas Valve

Refer to **Figure 13**.

1. Be sure gas and electrical supplies to furnace are off.
2. Remove caps that conceal adjustment screws for high heat and low heat gas–valve regulators. (See **Figure 13**)
3. Remove the high heat and low heat regulator adjustment screws.
4. Remove the high heat and low heat regulator springs (silver).
5. Install the high heat and low heat propane gas regulator springs (white).
6. Install the high heat and low heat regulator adjustment screws.
7. Turn high heat stage adjusting screw clockwise (in) 13.5 full turns. This will increase the manifold pressure closer to the propane set point.
8. Turn low heat stage adjusting screw clockwise (in) 9.5 full turns. This will increase the manifold pressure closer to the propane low heat set point.
9. Do not install regulator seal caps at this time.

Figure 13	(F/G)9MVT, (F/G)9MVE & (F/G)9MXT – Two–Stage Gas Valve

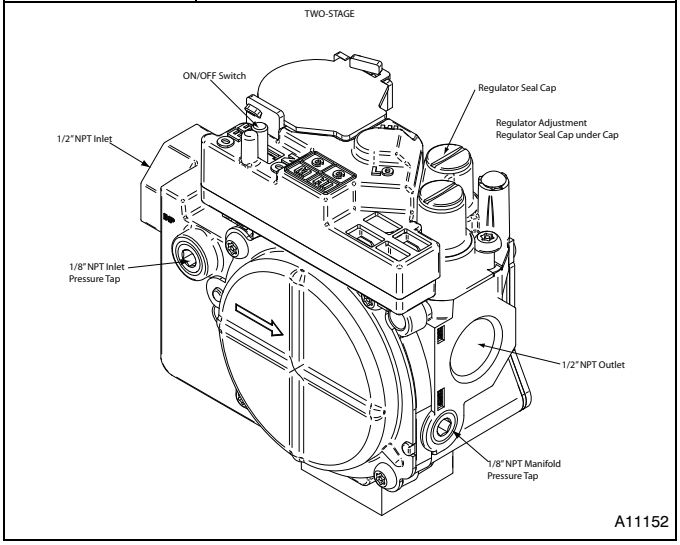

INSTALL LOW GAS PRESSURE SWITCH

NOTE: Install the Low Gas Pressure Switch before installing the manifold on the burner assembly.

There are two ways to mount the Low Gas Pressure Switch.

All 14 3/16-in Casings or Vent Passes Between Inducer Assembly and Burner Assembly

If the vent pipe passes between the inducer and burner assembly, or the furnace is a 14 3/16-in. wide casing, install the switch as follows (See **Figure 14**):

Figure 14	LGPS for 14–3/16 Casing or When Vent Passes Between Inducer and Burner Assembly

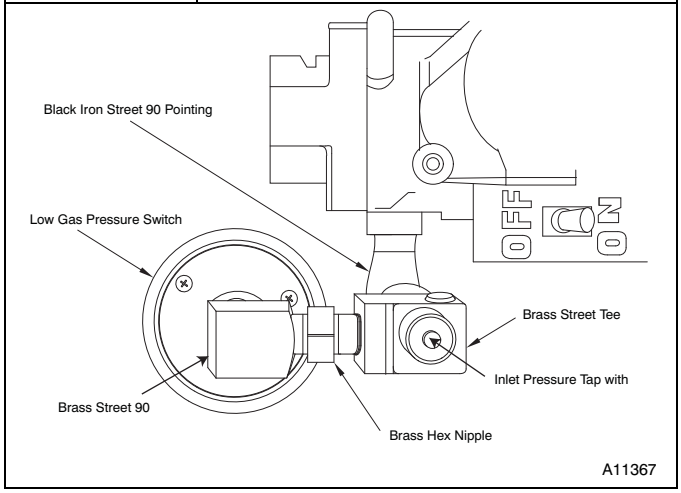

1. Remove the 1/8-in. NPT pipe plug from the gas valve inlet pressure tap.

NOTE: Use pipe dope approved for use with Propane Gas.

NOTE: Tighten all fittings and the Low Gas Pressure Switch with a small wrench. Do not over-tighten, check for gas leaks after gas supply has been turned on.

⚠ WARNING

FIRE AND EXPLOSION HAZARD

Failure to follow this warning could result in personal injury and/or death.

NEVER test for gas leaks with an open flame. Use a commercially available soap solution made specifically for the detection of leaks to check all connections. A fire or explosion may result causing property damage, personal injury or loss of life.

⚠ AVERTISSEMENT

RISQUE D'EXPLOSION ET D'INCENDIE

Le fait de ne pas suivre cet avertissement pourrait entraîner des dommages corporels et / ou la mort.

Ne jamais examiner pour les fuites de gaz avec une flamme vive. Utilisez plutôt un savon fait specifiquement pour la détection des fuites de gaz pour verifier tous les connections. Un incendie ou une explosion peut entrainer des dommages matériels, des blessures ou la mort.

2. Apply pipe dope sparingly to the male threads of the 1/8-in. black iron street elbow. Install the street elbow into the gas valve inlet pressure tap. Point the open end of the street elbow toward you.
3. Apply pipe dope sparingly to the male threads of the 1/8-in. brass street tee. Install the male end of the street

tee as shown in **Figure 14**. One opening on the street tee should face you. The other opening should be parallel with the inlet of the gas valve.

4. Apply pipe dope sparingly to the male threads of the 1/8-in. brass hex nipple. Install the hex nipple into the open end of the brass street tee. See **Figure 14**. The hex nipple should be parallel with the boss on the gas valve.
5. Install the open end of the brass street elbow on the end of the hex nipple. Tighten the street elbow so the male threads of the elbow point away from you.
6. Apply pipe dope sparingly to the male threads of the 1/8-in. brass street elbow. Install the Low Gas Pressure Switch on the male threads of the street elbow. Tighten switch at hex fitting at base of switch. Do not use switch body to tighten switch. Do not over-tighten switch.
7. The remaining opening on the brass street tee is the new gas valve inlet pressure tap. Install manometer fitting to the open end of the brass street tee. Or if installation is to be completed later, apply pipe dope to inlet pressure plug from gas valve and install in open end of brass street tee.
8. Check all fittings for leaks after gas supply has been turned on.

Casings Wider Than 14 3/16-in./Vent Does Not Pass Between Inducer and Burner Assembly

1. If the vent pipe does not pass between the inducer and burner assembly, or the furnace is wider than a 14 3/16-in. wide casing, install the switch as follows (See **Figure 15**):
2. Remove the 1/8-in. NPT pipe plug from the gas valve inlet pressure tap.

NOTE: Use pipe dope approved for use with Propane Gas.

NOTE: Tighten all fittings and the Low Gas Pressure Switch with a small wrench. Do not over-tighten, check for gas leaks after gas supply has been turned on.

3. Apply pipe dope sparingly to the male threads of the 1/8-in. brass street elbow. Install the street elbow into the gas valve inlet pressure tap. One end of the opening of the street elbow should be parallel with the inlet boss on the gas valve. The other opening should be pointing toward you.
4. Apply pipe dope sparingly to the male threads of the 1/8-in. long brass nipple. Install the nipple into the open end of the brass street elbow.
5. Install the open end of the brass street elbow on the end of the brass nipple. Tighten the street elbow so the male threads of the elbow point away from you.
6. Apply pipe dope sparingly to the male threads of the 1/8-in. brass street elbow. Install the Low Gas Pressure Switch on the male threads of the street elbow finger tight. Tighten switch at hex fitting at base of switch. Do not use switch body to tighten switch. Do not over-tighten switch.
7. The remaining opening on the brass street tee is the new gas valve inlet pressure tap. Install manometer fitting to the open end of the brass street tee. Or if installation is to be completed later, apply pipe dope to inlet pressure plug from gas valve and install in open end of brass street tee.
8. Check all fittings for leaks after gas supply has been turned on.

INSTALL LOW GAS PRESSURE SWITCH WIRES

1. Locate the orange wire in the kit with an insulated straight female spade terminal and an insulated straight male terminal on the other end.
2. Connect the female terminal to a terminal on the Low Gas Pressure Switch.
3. Locate the orange wire in kit with an insulated straight female spade terminal and an insulated female flag terminal on the other end.
4. Connect both straight female terminals of the orange wires to the terminals on the Low Gas Pressure Switch.

Figure 15 — **LGPS for Casing Wider Than 14–3/16 and Vent Does Not Pass Between Inducer and Burner Assembly**

For larger casing when Vent Pipe does not pass across casing. All Sizes switch contacts must point toward the Cell Panel. Black Iron Street 90 can be used at Valve Inlet instead of Brass Street 90.

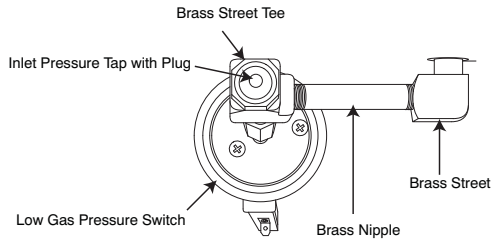

INSTALL MANIFOLD

1. Align the orifices in the manifold assembly with the support rings on the end of the burner.
2. Insert the orifices in the support rings of the burners. Manifold mounting tabs should fit flush against the burner box

NOTE: If manifold does not fit flush against the burner box, the burners are not fully seated forward. Remove the manifold and check burner positioning in the burner box assembly.

3. Attach the green/yellow wire and ground terminal to one of the manifold mounting screws.
4. Install the remaining manifold mounting screws.
5. Connect the wires to the flame sensor and hot surface igniter.
6. Connect the connector harness to gas valve

NOTE: Use only propane-resistant pipe dope. Do not use Teflon tape.

7. Insert the gas pipe through the grommet in the casing. Apply a thin layer of pipe dope to the threads of the pipe and thread the pipe into the gas valve.

NOTE: Use a back-up wrench on the gas valve to prevent the valve from rotating on the manifold or damaging the mounting to the burner box.

8. With a back-up wrench on the inlet boss of the gas valve, finish tightening the gas pipe to the gas valve.
9. Turn gas on at electric switch on gas valve.

MODIFY PRESSURE SWITCH WIRING

⚠ CAUTION

UNIT OPERATION HAZARD

Failure to follow this caution may result in unit damage or improper operation.

Label all wires prior to disconnection when servicing controls.

⚠ PRUDENCE

D'EQUIPEMENT D'OPERATION

Toute erreur de câblage peut être une source de danger et de panne.
Lors des opérations d'entretien des commandes, étiqueter tous les fils avant de les déconnecter.

1. Disconnect orange wire from Low Pressure switch LPS on inducer housing.
2. Connect the orange wire from the Low Pressure Switch to the orange wire with the insulated male spade terminal.
3. Connect the orange wire from the Low Gas Pressure Switch to the terminal on the Low Pressure Switch.

4. Route orange wires along wire harness. If possible, secure with wire tie provided in kit.

CHECK INLET GAS PRESSURE

⚠ CAUTION

UNIT DAMAGE HAZARD

Failure to follow this caution may result in unit damage.

DO NOT operate furnace more than one minute to check inlet gas pressure, as conversion is not complete at this time.

NOTE: This kit is to be used only when inlet gas pressure is between 11.0–in. wc and 13.6–in. w.c.

1. Verify manometer is connected to inlet pressure tap on gas valve. (See **Figure 13**)
2. Turn on furnace power supply.
3. Turn gas supply manual shutoff valve to ON position.
4. Turn furnace gas valve switch to ON position.

⚠ WARNING

FIRE, EXPLOSION, ELECTRICAL SHOCK HAZARD

Failure to follow this warning could result in personal injury, death or property damage.

Gas supply MUST be shut off before disconnecting electrical power and proceeding with conversion.

⚠ WARNING

ELECTRICAL SHOCK, FIRE OR EXPLOSION HAZARD

Failure to follow this warning could result in personal injury, death or property damage.

Before installing, modifying, or servicing system, main electrical disconnect switch must be in the OFF position and install a lockout tag. There may be more than one disconnect switch. Lock out and tag switch with a suitable warning label. Verify proper operation after servicing.

(F/G)9MAC & (F/G)9MAE – Modulating Gas Valve

1. Turn Setup Switch SW1–2 on furnace control ON (see **Figure 16**).
2. Jumper R–W/W1 and R–W2 thermostat connections on control.
3. When main burners ignite, confirm inlet gas pressure is between 11.0–in. w.c. and 13.6–in. w.c.
4. Remove jumper across R–W/W1 and R–W2 thermostat connections to terminate call for heat.
5. Turn furnace gas valve switch to OFF position.
6. Turn gas supply manual shutoff valve to OFF position.
7. Turn off furnace power supply.
8. Remove manometer.
9. Apply pipe dope sparingly to end of inlet gas pipe plug and install into unused end of 1/8 in. tee. Use a small back–up wrench on tee when tightening gas inlet pipe plug. (See **Figure 15**)

Figure 16 | **(F/G)9MAC & (F/G)9MAE – Example of Modulating Furnace Control for ECM Blower Motor**

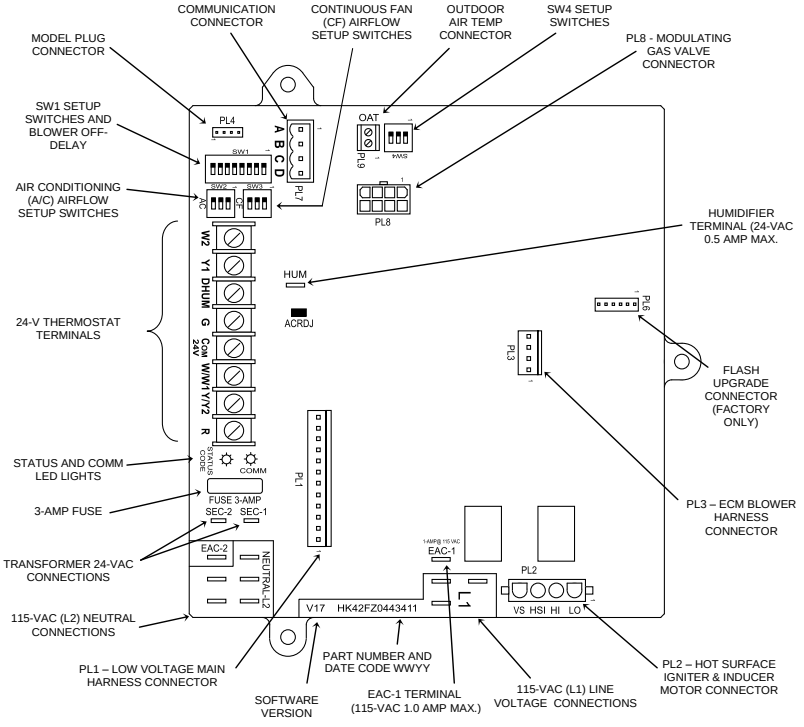

(F/G)9MVT & (F/G)9MVE – Variable Speed, Two–Stage Gas Valve

1. Turn Setup Switch SW1–2 on furnace control ON (See **Figure 17**).
2. Jumper R–W/W1 and R–W2 thermostat connections on control.
3. When main burners ignite, confirm inlet gas pressure is between 11.0–in. w.c. and 13.6–in. w.c.
4. Remove jumper across R–W/W1 and R–W2 thermostat connections to terminate call for heat.
5. Turn furnace gas valve switch to OFF position.
6. Turn gas supply manual shutoff valve to OFF position.
7. Turn off furnace power supply.
8. Remove manometer.
9. Apply pipe dope sparingly to end of inlet gas pipe plug and install into unused end of 1/8 in. tee. Use a small back–up wrench on tee when tightening gas inlet pipe plug. (See **Figure 15**)

Figure 17 | **(F/G)9MVT & (F/G)9MVE – Example of Variable Speed Furnace Control for ECM Blower Motor**

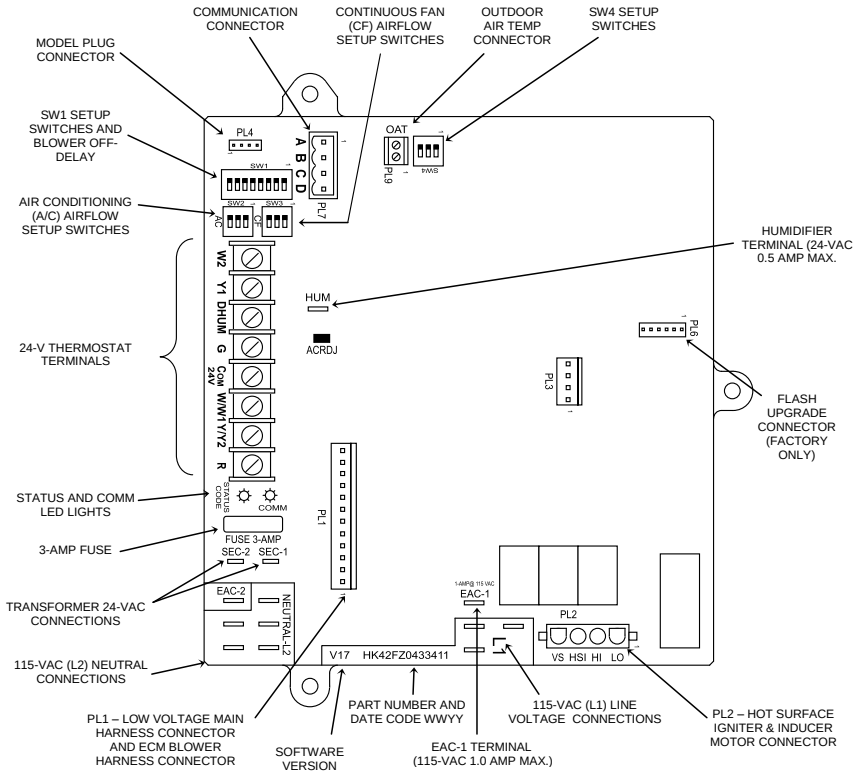

(F/G)9MXT – ECM Blower, Two–Stage Gas Valve

1. Turn Setup Switch SW1 (TT) on furnace control ON (see **Figure 18**).
2. Jumper R–W/W1 and R–W2 thermostat connections on control.
3. When main burners ignite, confirm inlet gas pressure is between 11.0–in. w.c. and 13.6–in. w.c.
4. Remove jumper across R–W/W1 and R–W2 thermostat connections to terminate call for heat.
5. Turn furnace gas valve switch to OFF position.
6. Turn gas supply manual shutoff valve to OFF position.
7. Turn off furnace power supply.
8. Remove manometer.
9. Apply pipe dope sparingly to end of inlet gas pipe plug and install into unused end of 1/8 in. tee. Use a small back–up wrench on tee when tightening gas inlet pipe plug. (See **Figure 14** & **Figure 15**)

Figure 18 | **(F/G)9MXT – Example of Two–stage Furnace Control**

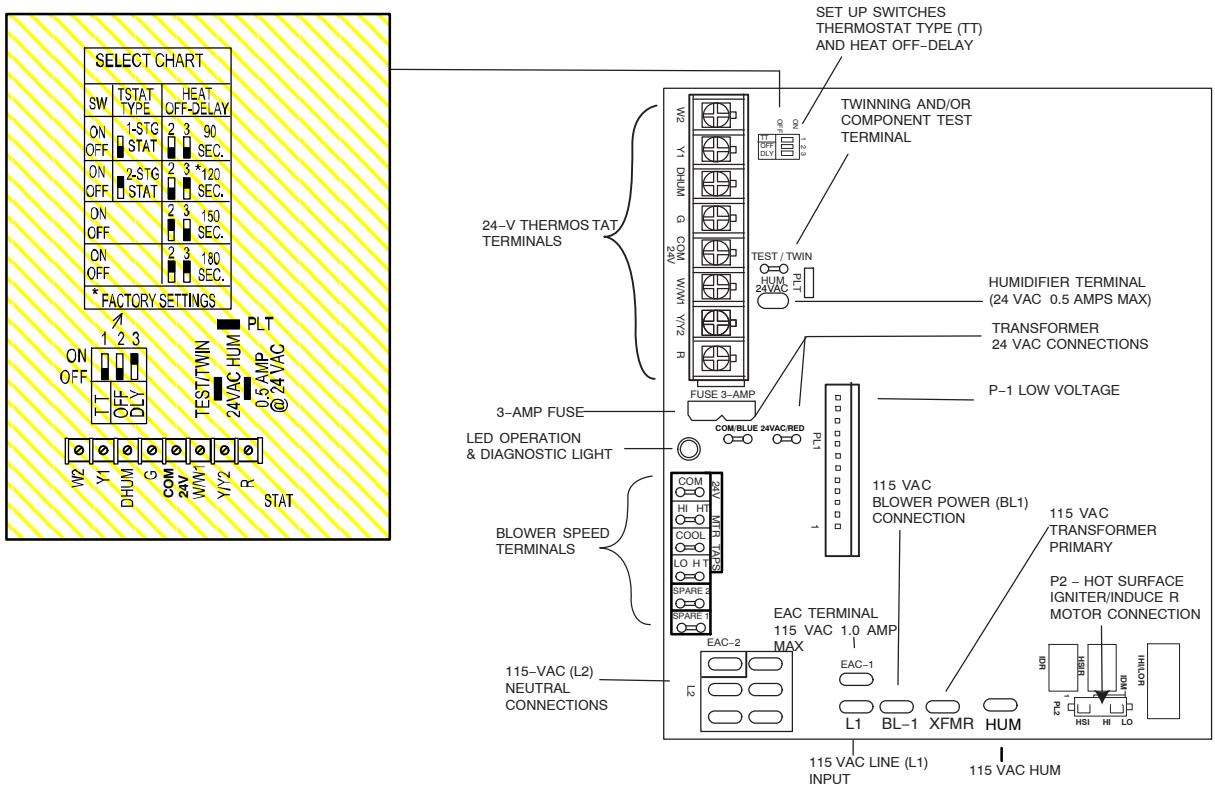

⚠ WARNING

FIRE, EXPLOSION, ELECTRICAL SHOCK HAZARD

Failure to follow this warning could result in personal injury, death or property damage.

Gas supply MUST be shut off before disconnecting electrical power and proceeding with conversion.

⚠ WARNING

ELECTRICAL SHOCK, FIRE OR EXPLOSION HAZARD

Failure to follow this warning could result in personal injury, death or property damage.

Before installing, modifying, or servicing system, main electrical disconnect switch must be in the OFF position and install a lockout tag. There may be more than one disconnect switch. Lock out and tag switch with a suitable warning label. Verify proper operation after servicing.

CHECK FURNACE AND MAKE ADJUSTMENTS

⚠ WARNING

FIRE AND EXPLOSION HAZARD

Failure to follow this warning could result in personal injury and/or death.

NEVER test for gas leaks with an open flame. Use a commercially available soap solution made specifically for the detection of leaks to check all connections. A fire or explosion may result causing property damage, personal injury or loss of life.

⚠ AVERTISSEMENT

RISQUE D'EXPLOSION ET D'INCENDIE

Le fait de ne pas suivre cet avertissement pourrait entraîner des dommages corporels et / ou la mort.

Ne jamais examiner pour les fuites de gaz avec une flamme vive. Utilisez plutôt un savon fait specifiquement pour la détection des fuites de gaz pour verifier tous les connections. Un incendie ou une explosion peut entrainer des dommages matériels, des blessures ou la mort.

1. Be sure main gas and electric supplies to furnace are off.
2. Remove 1/8-in. (3 mm) pipe plug from manifold pressure tap on downstream side of gas valve.
3. Attach manometer to manifold pressure tap on gas valve. (see **Figure 20** or **Figure 13**)
4. Turn gas supply manual shutoff valve to ON position.
5. Turn furnace gas valve switch to ON position.
6. Check all threaded pipe connections for gas leaks.
7. Turn on furnace power supply.

GAS INPUT RATE INFORMATION

The gas input rate for propane is the same as for natural gas. See furnace rating plate on blower door for input rate. The input rate for propane is determined by manifold pressure and orifice size.

The gas valve must be set for Maximum Heat first and then set for Minimum heat on Modulating furnaces. The gas valve must be set for High Heat first and then set for Low Heat on Two−Stage gas valve furnaces. Furnace gas input rate on rating plate is for installations at altitudes up to 2000 ft. (610 M).

In the U.S.A., the input rating for altitudes above 2000 ft. (610M) must be reduced by 2 percent for each 1000 ft. (305 M) above sea level.

In Canada, the input rating must be derated by 5 percent for altitudes of 2000 ft. (610 M) to 4500 ft. (1372 M) above sea level.

The Conversion Kit Rating Plate accounts for high altitude derate.

SET GAS INPUT RATE

Figure 19 | **Burner Flame**

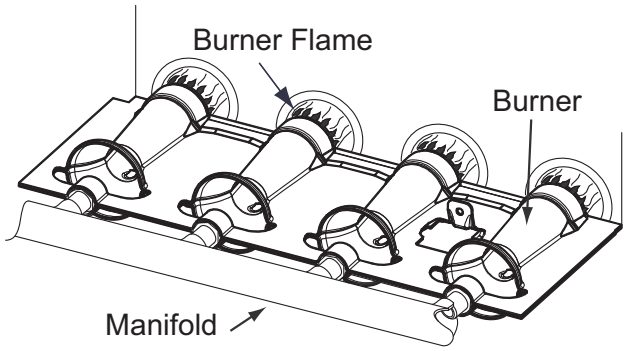

(F/G)9MAC & (F/G)9MAE – Modulating Gas Valve

Figure 20 | **Modulating Gas Valve**

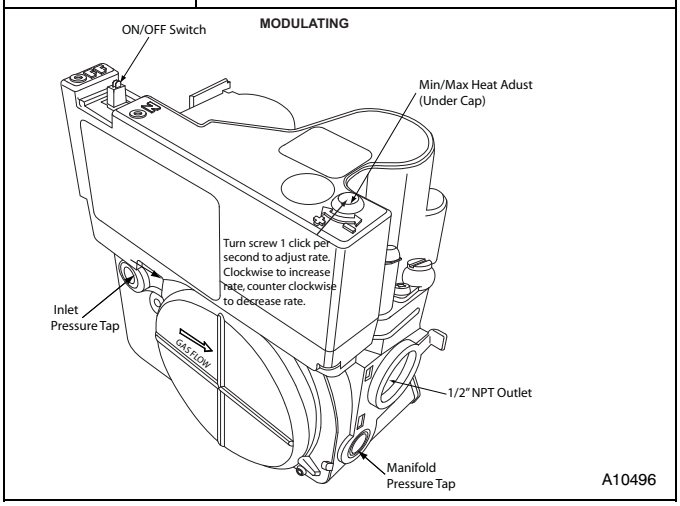

⚠ CAUTION

UNIT DAMAGE HAZARD

Failure to follow this caution may result in gas valve damage.

Do not force the rotary adjustment switch on the modulating gas valve. Do not turn the rotary adjustment switch faster than one click per second when adjusting manifold pressure. Gas valve will be damaged if excessive force is used on the rotary switch.

For proper operation and long term reliability, the manifold pressure must be adjusted as specified on the conversion kit rating plate.

The modulating furnace manifold pressure is set at two points. The first point is Maximum Heat. The second point is Minimum Heat. Do not adjust Intermediate Heat manifold pressure. Intermediate Heat manifold pressure can be checked as part of the temperature rise, but is not adjustable. Always adjust Maximum Heat first, then Minimum Heat.

NOTE: DO NOT set Maximum Heat manifold pressure less than 10.5-in. wc or more than 11-in. wc for propane gas.

NOTE: Use care when performing adjustments. Gas valve adjustment is performed by turning a rotary adjustment switch inside the gas valve with a small straight blade screwdriver. Excessive force can break or bend the rotary adjustment switch making it non−adjustable.

To adjust manifold pressure to obtain input rate for Maximum Heat:

1. Make sure the gas supply is turned off to the furnace and at the electric switch on the gas valve.
2. Remove the 1/8 inch NPT plug from the outlet pressure tap on the gas valve.
3. Connect a manometer to the outlet pressure tap on gas valve.
4. Turn on furnace power supply.
5. Turn gas supply manual shutoff valve to ON position.
6. Turn furnace gas valve switch to ON position.
7. Turn Setup switch SW1-2 to ON.
8. Verify Set-up switch SW4-2 is turned OFF.
9. Jumper the R to W/W1 and W2 thermostat connections at the furnace control board.

10. After the main burners ignite and the blower starts, confirm Maximum Heat manifold pressure is correct, based on the manifold pressure table on the Conversion Kit Rating Plate.
11. To adjust the Maximum Heat manifold pressure, Slowly turn the rotary adjustment switch counterclockwise to decrease manifold pressure or clockwise to increase manifold pressure.
12. Turn rotary adjustment switch no more than one click per second until you obtain the required manifold pressure.

Figure 21	Modulating Gas Valve Adjustment

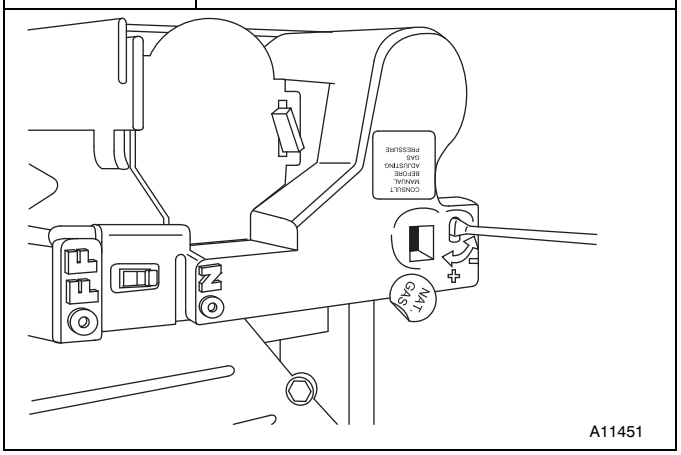

Main burner flame should be clear blue, almost transparent.

To adjust manifold pressure to obtain input rate for Minimum Heat:

1. Remove the jumper from W2 at the thermostat connections at the furnace control board control.
2. Wait until the burners and the blower transitions to Minimum Heat.
3. Verify the Minimum Heat manifold pressure is correct, based on the manifold pressure table on Conversion Kit Rating Plate.
4. To adjust the Minimum Heat manifold pressure, Slowly turn the rotary adjustment switch counterclockwise to decrease manifold pressure or clockwise to increase manifold pressure.
5. Turn rotary adjustment switch no more than one click per second until you obtain the required manifold pressure. This adjustment will not affect the previous Maximum Heat adjustment.

After adjusting the manifold pressure, allow the furnace to operate an additional 5 minutes before checking Minimum Heat Temperature rise.

Furnace must operate within ranges of temperature rise specified on the furnace rating plate. Determine air temperature rise as follows:

1. Place thermometers in return and supply ducts as near furnace as possible. Be sure thermometers do not see heat exchanger so that radiant heat does not affect readings. This practice is particularly important with straight-run ducts.
2. When thermometer readings stabilize, subtract return-air temperature from supply-air temperature to determine air temperature rise.
3. Refer to furnace Service and Technical Support Manual for information on adjusting furnace temperature rise.

(F/G)9MVT & (F/G)9MVE – Variable Speed, Two–Stage Gas Valve

Figure 22	Two–Stage Gas Valve

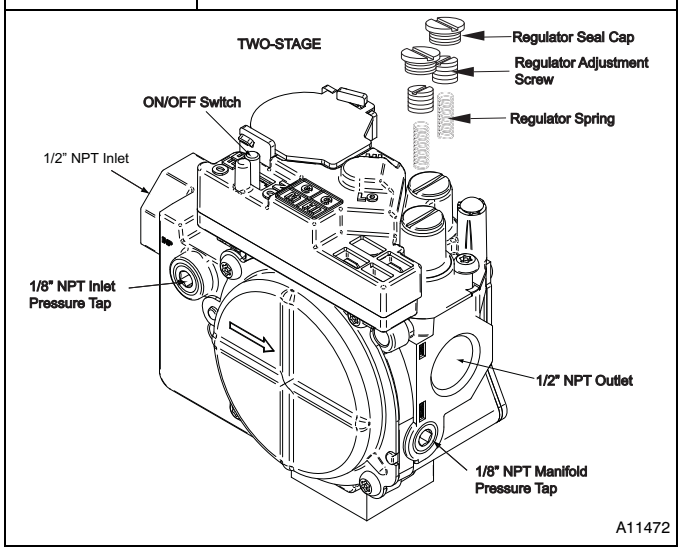

1. Verify SW1-2 on furnace control is turned “ON”.
2. Jumper R and W/W1 thermostat connections to call for heat.
3. Check manifold orifices for gas leaks when main burners ignite.
4. Adjust gas manifold pressure. Refer to Conversion Kit Rating Plate 339268–206.
5. Remove caps that conceal adjustment screws for gas valve regulators. See **Figure 22**.
6. Adjust low–heat manifold pressure for propane gas. See **Figure 22**.
7. Turn low–heat adjusting screw counterclockwise (out) to decrease input rate or clockwise (in) to increase input rate.

NOTE: When correct input is obtained, main burner flame should be clear blue, almost transparent (see **Figure 19**).

8. Jumper R, W/W1 and W2 on control center thermostat connections. This keeps furnace locked in high–heat operation.
9. Adjust high–heat manifold pressure for propane gas.
10. Turn high–heat adjusting screw counterclockwise (out) to decrease input rate or clockwise (in) to increase input rate.
11. Replace caps that conceal gas valve regulator adjustment screws.

NOTE: When correct input is obtained, main burner flame should be clear blue, almost transparent (see **Figure 19**).

12. Remove jumper across R, W1, and W2 after high–heat adjustment to terminate call for heat.
13. Turn setup switch SW1-2 on furnace control to OFF position.
14. Turn furnace gas valve switch to OFF position.
15. Turn off furnace power supply.
16. Remove manometer and re-install manifold pressure tap plug.
17. Turn furnace gas valve switch to ON position.
18. Turn on furnace power supply.
19. Set room thermostat to call for heat.
20. Check pressure tap plug for gas leaks when main burners ignite.
21. Check for correct burner flame.
22. Observe unit operation through two complete heating cycles.

23. See Sequence of Operation in furnace Installation, Start−up, and Operating Instructions.
24. Set room thermostat to desired temperature.
25. After making the required manifold pressure adjustments, check and adjust the furnace temperature rise per the furnace installation instructions.

(F/G)9MXT − ECM Blower, Two−Stage Gas Valve

1. Verify SW1 (TT) on furnace control is turned “ON”. See **Figure 18**.
2. Jumper R and W/W1 thermostat connections to call for heat.
3. Check manifold orifices for gas leaks when main burners ignite.
4. Adjust gas manifold pressure.
5. Remove caps that conceal adjustment screws for gas valve regulators. (See **Figure 22**)
6. Adjust low heat input rate manifold pressure for propane gas.
7. Turn low heat adjusting screw counterclockwise (out) to decrease input rate or clockwise (in) to increase input rate.
8. When correct input is obtained, main burner flame should be clear blue, almost transparent. (See **Figure 19**)
9. Jumper R and W/W1 and W2 on control center thermostat connections. This keeps furnace locked in high heat operation.
10. Adjust high heat input rate manifold pressure for propane gas.
11. Turn high heat adjusting screw counterclockwise (out) to decrease input rate or clockwise (in) to increase input rate.
12. Replace caps that conceal gas valve regulator adjustment screws.
13. When correct input is obtained, main burner flame should be clear blue, almost transparent. (See **Figure 19**)
14. Remove jumper across R, W1, and W2 after high heat adjustment to terminate call for heat.
15. Turn setup switch SW1 (TT) on furnace control to OF position.
16. Turn furnace gas−valve switch to OFF position.
17. Turn off furnace power supply.
18. Remove manometer and reinstall manifold pressure tap plug.
19. Turn furnace gas−valve switch to ON position.
20. Turn on furnace power supply.
21. Set room thermostat to call for heat.
22. Check pressure tap plug for gas leaks when main burners ignite.
23. Check for correct burner flame.
24. Observe unit operation through two complete heating cycles.
25. See Sequence of Operation in furnace Installation, Start−Up, and Operating Instructions.
26. Set room thermostat to desired temperature.
27. After making the required manifold pressure adjustments, check and adjust the furnace temperature rise per the furnace installation instructions.

CHECK LOW GAS PRESSURE SWITCH

The newly installed low gas pressure switch is a safety device used to guard against adverse burner operating characteristics that can result from low gas supply pressure. Switch opens at not less than 6.5 in. w.c. and closes at not greater than 10.2 in. w.c.

This switch also prevents operation when the propane tank level is low which can result in gas with a high concentration of impurities, additives, and residues that have settled to the bottom of the tank. Operation under these conditions can cause harm to the heat exchanger system. This normally open switch closes when gas is supplied to gas valve under normal operating pressure. The closed switch completes control circuit. Should an interruption or reduction in gas supply occur, the gas pressure at switch drops below low gas pressure switch setting, and switch opens. Any interruption in control circuit (in which low gas pressure switch is wired) quickly closes gas valve and stops gas flow to burners. When normal gas pressure is restored, the system must be electrically reset to re-establish normal heating operation.

Before leaving installation, observe unit operation through two complete heating cycles. During this time, turn gas supply to gas valve off just long enough to completely extinguish burner flame, then instantly restore full gas supply. To ensure proper low gas pressure switch operation, observe that there is no gas supply to burners until after hot surface igniter begins glowing.

LABEL APPLICATION

1. Fill in Conversion Responsibility Label 339268−205 and apply to Blower Access Door of furnace. Date, name, and address of organization making this conversion are required. (See **Figure 23**)
2. Attach Conversion Rating Plate Label 339268−201 or 339268−206 to outer door of furnace. (See **Figure 6**)
3. Attach Gas Control Conversion Label 339268−202 to gas valve. Do not use 339268−203, which is similar.

Figure 23 **Conversion Responsibility Label**

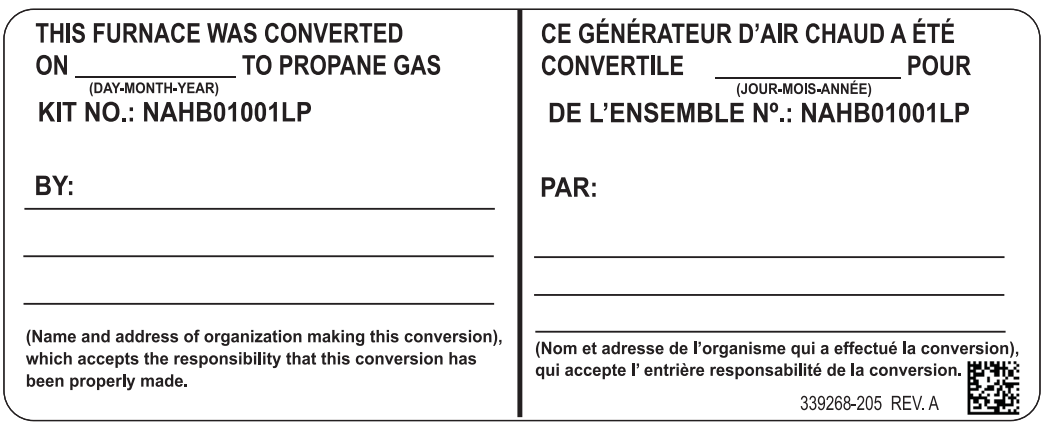
THIS FURNACE WAS CONVERTED
ON _____ TO PROPANE GAS
(DAY-MONTH-YEAR)
KIT NO.: NAHB01001LP
BY:
(Name and address of organization making this conversion), which accepts the responsibility that this conversion has been properly made.
CE GÉNÉRATEUR D’AIR CHAUD A ÉTÉ
CONVERTILE _____ POUR
(JOUR-MOIS-ANNÉE)
DE L’ENSEMBLE Nº.: NAHB01001LP
PAR:
(Nom et adresse de l’organisme qui a effectué la conversion), qui accepte l’ entrière responsabilité de la conversion.
339268-205 REV. A

SECTION 2
NON CONDENSING FURNACES

MODEL NUMBERS BEGINNING WITH:	
(F,G)8MVL	(F,G)8MTL

INSTALLATION

⚠ WARNING

FIRE, EXPLOSION, ELECTRICAL SHOCK, AND CARBON MONOXIDE POISONING HAZARD

Failure to follow this warning could result in personal injury or death.

This conversion kit shall be installed by a qualified service agency in accordance with the manufacturer's instructions and all applicable codes and requirements of the authority having jurisdiction. If the information in these instructions is not followed exactly, a fire, explosion, or production of carbon monoxide could result causing property damage, personal injury, or loss of life. The qualified service agency is responsible for the proper installation of this furnace with this kit. The installation is not proper and complete until the operation of the converted appliance is checked as specified in the manufacturer's instructions supplied with the kit.

⚠

LE FEU, L'EXPLOSION, CHOC ELECTRIQUE, ET MONOXYDE DE CARBONE EMPOISONNER

Cette trousse de conversion doit être installée par un servie d'entretien qualifié, selon les instructions du fabricant et selon toutes les exigences et tous les codes pertinents de l'autorité compétente. Assurezvous de bien suivre les instructions dans cette notice pour réduire au minimum le risque d'incendie, d'explosion ou la production de monoxyde de carbone pouvant causer des dommages matériels, de blessure ou la mort. Le service d'entretien qualifié est responsable de l'installation de cette trousse. L'installation n'est pas adéquate ni complète tant que le bon fonctionnement de l'appereil converti n'a pas été vérfié selon les instructions du fabricant fornies avec la trousse.

⚠ WARNING

FIRE, EXPLOSION, ELECTRICAL SHOCK AND CARBON MONOXIDE POISONING HAZARD

Failure to follow instructions could result in personal injury, death or property damage.

Improper installation, adjustment, alteration, service, maintenance, or use can cause carbon monoxide poisoning, explosion, fire, electrical shock, or other conditions, which could result in personal injury or death. Consult your distributor or branch for information or assistance. The qualified installer or agency must use only factory−authorized kits or accessories when servicing this product.

⚠ WARNING

FIRE, EXPLOSION, ELECTRICAL SHOCK HAZARD

Failure to follow this warning could result in personal injury, death or property damage.

Gas supply MUST be shut off before disconnecting electrical power and proceeding with conversion.

1. Set room thermostat to lowest setting or "OFF".
2. Remove outer doors.
3. Disconnect power at external disconnect, fuse or circuit breaker.
4. Turn off gas at external shut-off or gas meter.
5. Remove outer doors and set aside.
6. Turn electric switch on gas valve to OFF.

Figure 24 | **Representative Furnace Drawing**

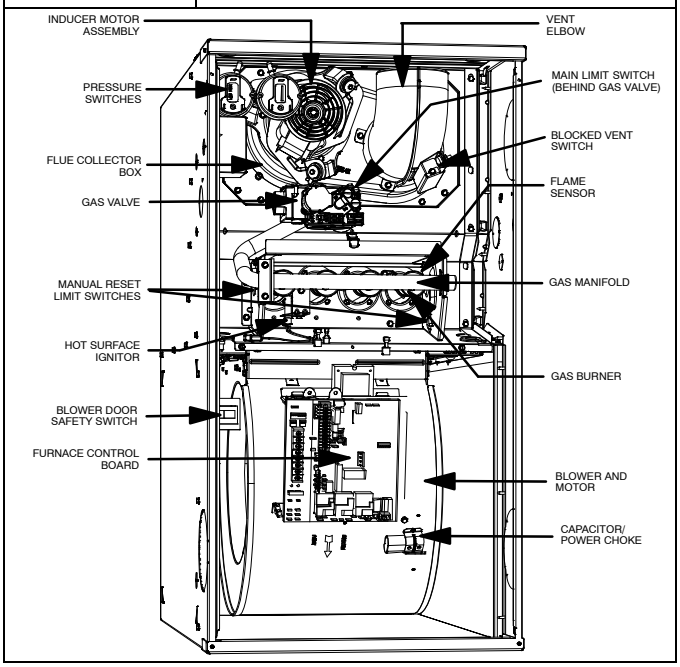

MANIFOLD/ORIFICE/BURNER REMOVAL

⚠ CAUTION

UNIT OPERATION HAZARD

Failure to follow this caution may result in unit damage or improper operation.

Label all wires prior to disconnection when servicing controls.

⚠ PRUDENCE

D'EQUIPEMENT D'OPERATION

Toute erreur de câblage peut être une source de danger et de panne.
Lors des opérations d'entretien des commandes, étiqueter tous les fils avant de les déconnecter.

NOTE: Use a back-up wrench on the gas valve to prevent the valve from rotating on the manifold or damaging the mounting to the burner box. See **Figure 25** and **Figure 26**.

1. Disconnect the gas pipe from gas valve and remove pipe from the furnace casing.
2. Disconnect the connector harness from gas valve. Disconnect wires from Hot Surface Igniter (HSI) and Flame Sensor.
3. Support the manifold and remove the 4 screws that secure the manifold assembly to the burner box and set aside.
4. Note the location of the green/yellow wire ground wire for re-assembly later.
5. Remove wires from both rollout switches.
6. Slide one−piece burner assembly out of slots on sides of burner box.
7. Remove the flame sensor from the burner assembly.
8. Remove the orifices from the manifold and discard.

Figure 25 | **80% Burner**

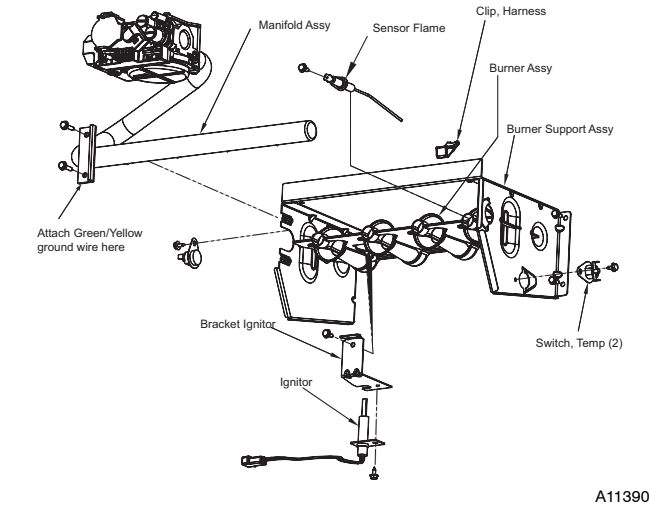

Figure 26 | **80% Manifold**

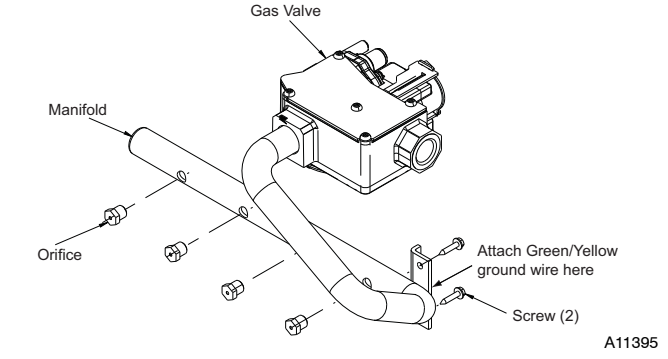

NOx DEVICE REMOVAL

⚠ CAUTION

UNIT DAMAGE HAZARD

Failure to follow this caution may result in unit damage.

Furnace MUST have low NOx devices removed prior to operating furnace on propane gas.

For NOx device removal, follow these additional steps:

1. Remove the screw underneath the heat exchanger inlet that secures the NOx device in the heat exchanger. (See **Figure 27**)

Figure 27 | **NOx Device Removal**

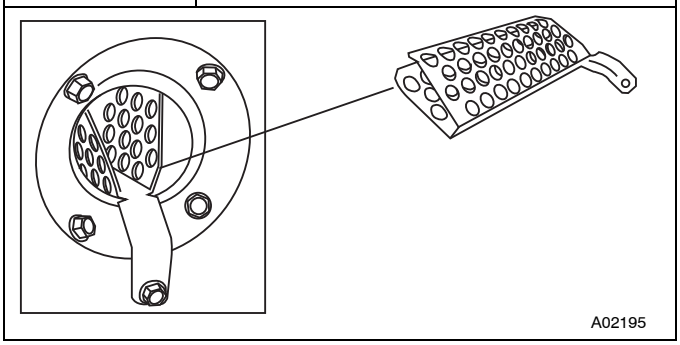

2. Use a pair of needle nose pliers to remove the NOx device.
3. Squeeze the sides of the device, if necessary, to remove from the heat exchanger.
4. Re-install screw in hole underneath heat exchanger inlet.

NOTE: It is very IMPORTANT to reinstall the NOx bracket mounting screw.

5. Repeat steps for each heat exchanger.

ORIFICE SELECTION/DERATE

⚠ CAUTION

UNIT DAMAGE HAZARD

Failure to follow this caution may result in unit damage.

DO NOT re−drill burner orifices. Improper drilling may result in burrs, out−of−round holes, etc. Obtain new orifices if orifice size must be changed. (See **Figure 28**)

Figure 28 | **Burner Orifice**

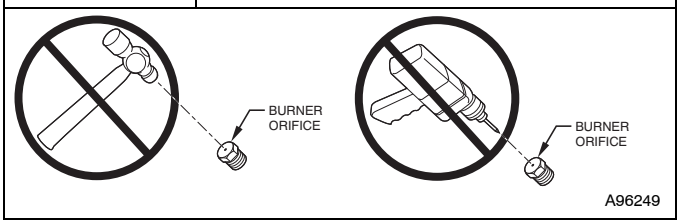

Refer to conversion kit rating plate 337704−204 to determine main burner orifice size. (See **Figure 30**)

Furnace gas input rate on furnace rating plate is for installations at altitudes up to 2000 ft.

In the U.S.A.; the input rating for altitudes above 2000 ft. must be reduced by 2 percent for each 1000 ft. above sea level.

In Canada, the input rating must be derated by 5 percent for altitudes of 2000 ft. to 4500 ft. above sea level.

The Conversion Kit Rating Plate accounts for high altitude derate.

Install main burner orifices. Do not use Teflon tape. Finger-tighten orifices at least one full turn to prevent cross-threading, then tighten with wrench. There are enough orifices in each kit for largest furnace. Discard extra orifices.

INSTALL ORIFICES

1. Install main burner orifices. Do not use Teflon tape. Finger-tighten orifices at least one full turn to prevent cross-threading, then tighten with wrench.
2. There are enough orifices in each kit for largest furnace. Discard extra orifices.

NOTE: DO NOT reinstall the manifold at this time.

INSTALL MIXER SCREWS

NOTE: There are two sets of mixer screws. One set is for Condensing gas furnaces, the other set is for Non-condensing gas furnaces. Use only the parts in the bag marked **"REQUIRED FOR THE CONVERSION OF NON–CONDENSING GAS FURNACES TO PROPANE GAS"**

See **Figure 29** to verify you have the correct set of mixer screws.

1. Locate the dimple on each burner venturi tube. If you cannot locate the dimple, refer to **Figure 31** for location of the mixer screw.
2. Drill a 5/64-in. (2.8 mm) hole (supplied in kit) in each dimple.
3. Install a mixer screw in each drilled hole drilling as straight as possible. The screw head should be flush with the top of the burner venturi.

Figure 29 | **Gas Conversion Kit**

337932-702

PART #	CONTAINS: DESCRIPTION	QTY
328456-401	BIT, DRILL	1
327593-401	SCREW	7

REQUIRED FOR CONVERSION OF NON CONDENSING GAS FURNACE TO PROPANE GAS.

A11397

Figure 30 | **Conversion Kit Rating Plate – (F/G)8MTL & (F/G)8MVL**

CONVERSION KIT RATING PLATE - INTERNATIONAL COMFORT PRODUCTS, LLC U.S.A.

THIS APPLIANCE HAS BEEN CONVERTED TO USE PROPANE GAS FOR FUEL. REFER TO KIT INSTRUCTIONS FOR CONVERSION PROCEDURES. USE PARTS SUPPLIED BY MANUFACTURER AND INSTALLED BY QUALIFIED PERSONNEL.
SEE EXISTING RATING PLATE FOR APPLIANCE MODEL NO. AND INPUT RATING.

NOTE: Furnace gas input rate on rating plate is for installations up to 2000 ft. above sea level. In U.S.A. the input rating for altitudes above 2000 ft. must be derated by 4% for each 1000 ft. above sea level. In Canada the input rating must be derated by 10% for altitudes of 2000 ft. to 4500 ft. above sea level.

KIT NO.: NAHB01001LP **SUPERSEDES: NAHA00801LP, NAHA01001LP** **FUEL USED: PROPANE GAS** **INLET PRESSURE (min - max): 11.0 - 13.6 in. wc**

APPLIANCE MODELS		ALTITUDE OF INSTALLATION (FT. ABOVE SEA LEVEL) U.S.A. *								
		0 to 2000	2001 * to 3000	3001 to 4000	4001 to 5000	5001 to 6000	6001 to 7000	7001 to 8000	8001 to 9000	9001 to 10000
*8MTL, *8MVL	Orifice No.	55	1.30mm	1.30mm	1.25mm	1.25mm	1.25mm	56	56	56
		Manifold Pressure								
	HIGH	11.0	11.0	10.5	11.0	11.0	10.5	11.0	11.0	10.5
	LOW	5.8	5.3	5.0	5.5	5.2	4.9	5.7	5.2	4.8

*** For Canadian Installations from 2000 to 4500 ft. use U.S.A. column 2001 to 3000 ft.**

339268-204 REV. A

Figure 31 | **Mixer Screw Location**

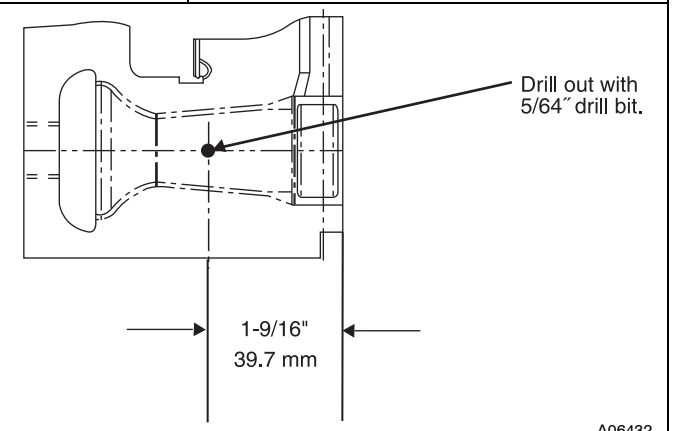

A06432

Figure 32 | **Igniter Position – Side View**

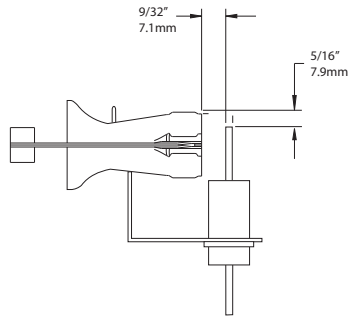

A05025

REINSTALL BURNER ASSEMBLY

To reinstall burner assembly:

1. Attach flame sensor to burner assembly.
2. Install HSI and bracket to burner assembly.
3. Insert one-piece burner in slot on sides of burner box and slide burner back in place.
4. Reattach HSI wires to HSI.
5. Verify igniter to burner alignment.
6. For Silicon Nitride igniters, see **Figure 32** and **Figure 33**.
7. Re-attach Flame sensor wire to Flame Sensor.

Figure 33 | **Igniter Position – Top View**

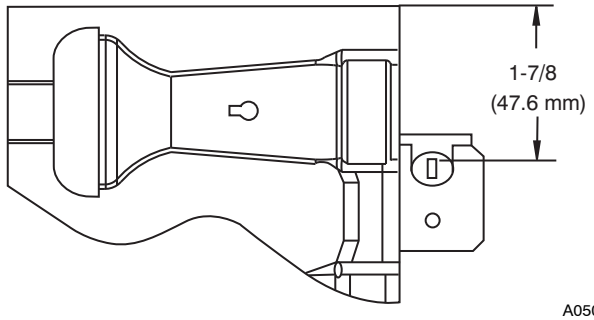

A05026

CONVERT GAS VALVE

CAUTION

UNIT DAMAGE HAZARD

Failure to follow this caution may result in unit damage

The gas valve must be converted and pre−adjusted before operating on propane gas. If not converted and pre−adjusted, sooting and corrosion will occur leading to early heat exchanger failure.

WARNING

FIRE, EXPLOSION, ELECTRICAL SHOCK HAZARD

Failure to follow this warning could result in personal injury, death or property damage.

Gas supply MUST be shut off before disconnecting electrical power and proceeding with conversion.

WARNING

ELECTRICAL SHOCK, FIRE OR EXPLOSION HAZARD

Failure to follow this warning could result in personal injury, death or property damage.

Before installing, modifying, or servicing system, main electrical disconnect switch must be in the OFF position and install a lockout tag. There may be more than one disconnect switch. Lock out and tag switch with a suitable warning label. Verify proper operation after servicing.

NOTE: For the two−stage furnaces with a Series J gas valve (see **Figure 34**), **they MUST have both regulator springs replaced and the gas valve MUST be pre−adjusted.**

1. Be sure main gas and electrical supplies are turned OFF.
2. Remove both regulator seal caps. (See **Figure 34**)
3. Remove both regulator adjustment screws.
4. Remove both natural gas regulator springs (silver).
5. Install propane gas regulator springs (white).
6. Install regulator adjustment screws.
7. Turn low−heat stage adjusting screw clockwise (inwards) 9.5 turns. This will increase the manifold pressure closer to the low−heat set point.
8. Turn high−heat stage adjusting screw clockwise (inwards) 13.5 turns. This will increase the manifold pressure closer to the high−heat set point.
9. Do not install regulator seal caps at this time.

Figure 34 | **(F/G)8MVL & (F/G)8MTL − Two−Stage Gas Valve**

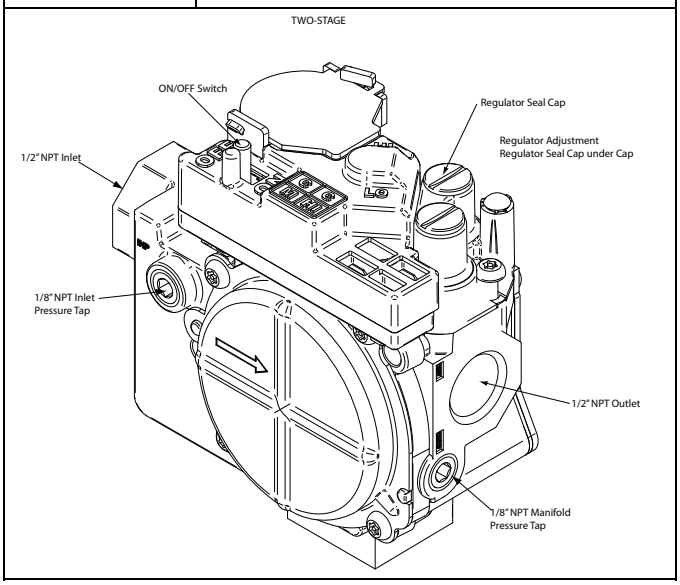

INSTALL MANIFOLD

1. Align the orifices in the manifold assembly with the support rings on the end of the burner.
2. Insert the orifices in the support rings of the burners. Manifold mounting tabs should fit flush against the burner box.

NOTE: If manifold does not fit flush against the burner box, the burners are not fully seated forward. Remove the manifold and check burner positioning in the burner box assembly.

3. Attach the green/yellow wire and ground terminal to one of the manifold mounting screws.
4. Install the remaining manifold mounting screws.
5. Connect the wires to the flame sensor and hot surface igniter.
6. Connect the wires to both rollout switches.
7. Connect the connector harness to gas valve.

NOTE: Use only propane-resistant pipe dope. Do not use Teflon tape.

8. Insert the gas pipe through the grommet in the casing. Apply a thin layer of pipe dope to the threads of the pipe and thread the pipe into the gas valve.

NOTE: Use a back-up wrench on the gas valve to prevent the valve from rotating on the manifold or damaging the mounting to the burner box.

9. With a back-up wrench on the inlet boss of the gas valve, finish tightening the gas pipe to the gas valve.
10. Turn gas on at electric switch on gas valve.

INSTALL LOW GAS PRESSURE SWITCH

WARNING

FIRE, EXPLOSION, ELECTRICAL SHOCK HAZARD

Failure to follow this warning could result in personal injury, death or property damage.

Gas supply MUST be shut off before disconnecting electrical power and proceeding with conversion.

⚠ WARNING

ELECTRICAL SHOCK, FIRE OR EXPLOSION HAZARD

Failure to follow this warning could result in personal injury, death or property damage.

Before installing, modifying, or servicing system, main electrical disconnect switch must be in the OFF position and install a lockout tag. There may be more than one disconnect switch. Lock out and tag switch with a suitable warning label. Verify proper operation after servicing.

NOTE: Use propane-gas-resistant pipe dope on all connections to prevent gas leaks. DO NOT use Teflon tape.

1. Be sure main gas and electric supplies to furnace are off.
2. Remove 1/8-in. (3 mm) pipe plug from inlet pressure tap on gas valve. DO NOT DISCARD 1/8-in. (3 mm) PLUG.
3. Apply pipe dope sparingly to one end of 1/8-in. (3 mm) x 2—in. (50.8 mm) brass nipple (provided in kit) and install the doped end in 1/8-in. (3 mm) tapped opening in gas valve inlet pressure-tap. Tighten fitting with a small wrench.
4. Apply pipe dope sparingly to opposite end of the 1/8-in. (3 mm) x 2—in. (50.8 mm) brass coupling (provided in kit). Install the female end of the female x female x male tee on the brass coupling.
5. Tighten tee finger tight. Use a small open-end wrench for final tightening. The male end of the tee should be facing you.
6. Apply pipe dope sparingly to male end of brass tee.
7. Install propane low gas pressure switch (provided in kit) on male end of the female x female x male tee.
8. Tighten switch finger tight.
9. Use a small open-end wrench on base of pressure switch for final tightening. The contacts of the LGPS should be pointing toward the inducer motor when complete.
10. The remaining opening on the brass street tee is the new gas valve inlet pressure tap.
11. Install manometer fitting to the open end of the brass street tee. Or if installation is to be completed later, apply pipe dope to inlet pressure plug from gas valve and install in open end of brass street tee.
12. Check all fittings for leaks after gas supply has been turned on.

⚠ WARNING

FIRE AND EXPLOSION HAZARD

Failure to follow this warning could result in personal injury and/or death.

NEVER test for gas leaks with an open flame. Use a commercially available soap solution made specifically for the detection of leaks to check all connections. A fire or explosion may result causing property damage, personal injury or loss of life.

⚠ AVERTISSEMENT

RISQUE D'EXPLOSION ET D'INCENDIE

Le fait de ne pas suivre cet avertissement pourrait entraîner des dommages corporels et / ou la mort.

Ne jamais examiner pour les fuites de gaz avec une flamme vive. Utilisez plutôt un savon fait specifiquement pour la détection des fuites de gaz pour verifier tous les connections. Un incendie ou une explosion peut entrainer des dommages matériels, des blessures ou la mort.

MODIFY PRESSURE SWITCH WIRING

⚠ CAUTION

UNIT OPERATION HAZARD

Failure to follow this caution may result in unit damage or improper operation.

Label all wires prior to disconnection when servicing controls.

⚠ PRUDENCE

D'EQUIPEMENT D'OPERATION

Toute erreur de câblage peut être une source de danger et de panne.
Lors des opérations d'entretien des commandes, étiqueter tous les fils avant de les déconnecter.

1. Locate the orange wire in the kit with an insulated straight female spade terminal and an insulated straight male terminal on the other end.
2. Connect the female terminal to a terminal on the Low Gas Pressure Switch.
3. Locate the orange wire in the kit with an insulated straight female spade terminal and an insulated female flag terminal on the other end.
4. Connect both straight female terminals of the orange wires to the terminals on the Low Gas Pressure Switch.
5. Disconnect orange wire from low–heat pressure switch LPS on inducer housing.
6. Connect the orange wire from the Low Heat Pressure Switch to the orange wire with the insulated male spade terminal.
7. Connect the orange wire from the Low Gas Pressure Switch to the terminal on the Low Heat Pressure Switch.
8. Route orange wires along wire harness. If possible, secure with wire tie provided in kit.

Figure 35 | **80% Pressure Switch Wiring**

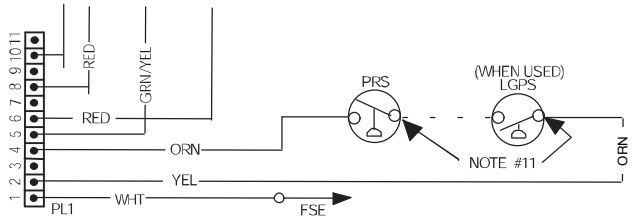

Figure 36	(F/G)8MVL – Example of 80% Variable Speed, Two–Stage Gas Valve Furnace Control

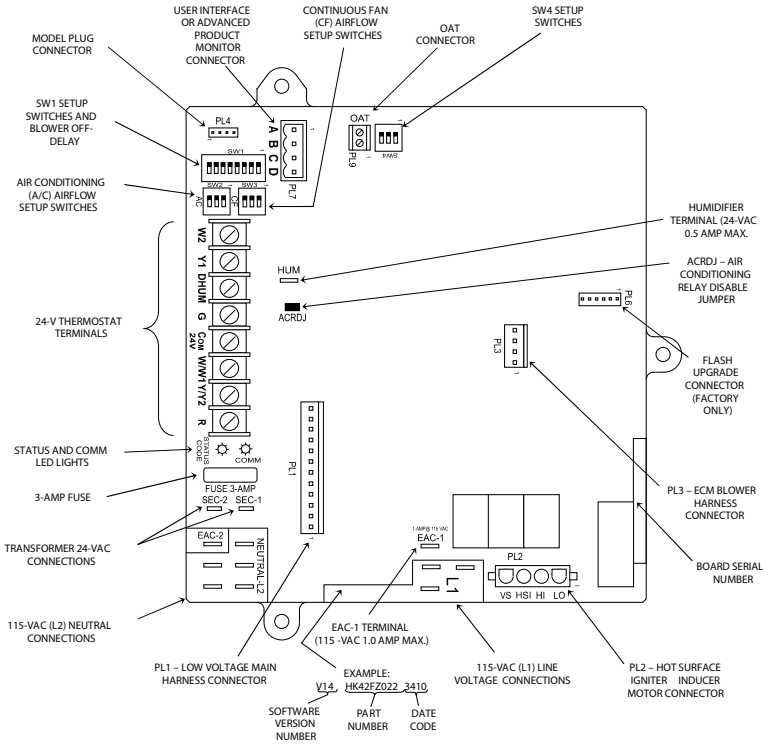

(F/G)8MTL – Example of 80% Two–Stage Gas Valve Furnace Control

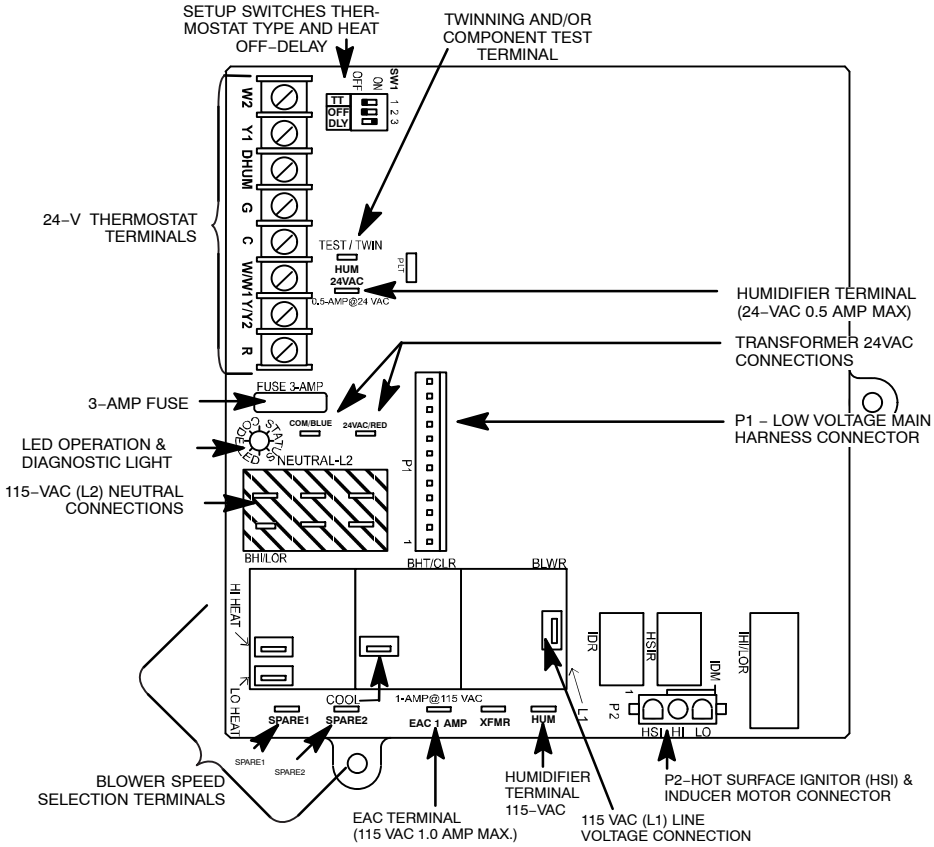

CHECK INLET GAS PRESSURE

⚠ CAUTION

UNIT DAMAGE HAZARD

Failure to follow this caution may result in unit damage.

DO NOT operate furnace more than one minute to check inlet gas pressure, as conversion is not complete at this time.

NOTE: This kit is to be used only when inlet gas pressure is between 11.0-in. wc and 13.6-in. w.c.

1. Verify manometer is connected to inlet pressure tap on gas valve.
2. Turn on furnace power supply.
3. Turn gas supply manual shutoff valve to ON position.
4. Turn furnace gas valve switch to ON position.
5. Turn Setup Switch SW1–2 on furnace control ON (see **Figure 36**).
6. Jumper R–W/W1 and R–W2 thermostat connections on control.
7. When main burners ignite, confirm inlet gas pressure is between 11.0-in. w.c. and 13.6-in. w.c.
8. Remove jumper across R-W/W1 and R-W2 thermostat connections to terminate call for heat.
9. Turn furnace gas valve switch to OFF position.
10. Turn gas supply manual shutoff valve to OFF position.
11. Turn off furnace power supply.
12. Remove manometer.
13. Apply pipe dope sparingly to end of inlet gas pipe plug and install into unused end of 1/8 in. tee. Use a small back–up wrench on tee when tightening gas inlet pipe plug. (See **Figure 37**)

Figure 37 | **80% Low Gas Pressure Switch**

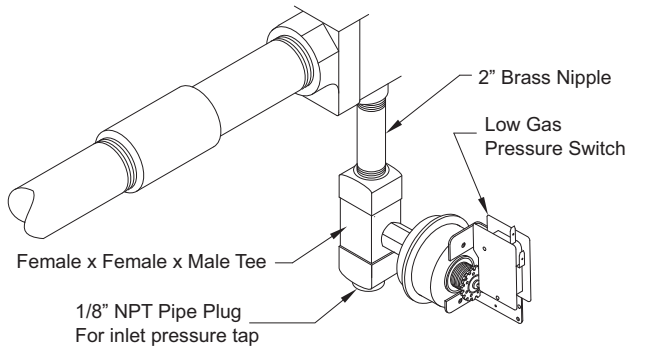

CHECK FURNACE AND MAKE ADJUSTMENTS

⚠ WARNING

FIRE AND EXPLOSION HAZARD

Failure to follow this warning could result in personal injury and/or death.

NEVER test for gas leaks with an open flame. Use a commercially available soap solution made specifically for the detection of leaks to check all connections. A fire or explosion may result causing property damage, personal injury or loss of life.

⚠ AVERTISSEMENT

RISQUE D’EXPLOSION ET D’INCENDIE

Le fait de ne pas suivre cet avertissement pourrait entraîner des dommages corporels et / ou la mort.

Ne jamais examiner pour les fuites de gaz avec une flamme vive. Utilisez plutôt un savon fait specifiquement pour la détection des fuites de gaz pour verifier tous les connections. Un incendie ou une explosion peut entrainer des dommages matériels, des blessures ou la mort.

⚠ WARNING

FIRE, EXPLOSION, ELECTRICAL SHOCK HAZARD

Failure to follow this warning could result in personal injury, death or property damage.

Gas supply MUST be shut off before disconnecting electrical power and proceeding with conversion.

⚠ WARNING

ELECTRICAL SHOCK, FIRE OR EXPLOSION HAZARD

Failure to follow this warning could result in personal injury, death or property damage.

Before installing, modifying, or servicing system, main electrical disconnect switch must be in the OFF position and install a lockout tag. There may be more than one disconnect switch. Lock out and tag switch with a suitable warning label. Verify proper operation after servicing.

1. Be sure main gas and electric supplies to furnace are off.
2. Remove 1/8–in. (3 mm) pipe plug from manifold pressure tap on downstream side of gas valve.
3. Attach manometer to manifold pressure tap on gas valve.
4. Turn gas supply manual shutoff valve to ON position.
5. Turn furnace gas valve switch to ON position.
6. Check all threaded pipe connections for gas leaks.
7. Turn on furnace power supply.

GAS INPUT RATE INFORMATION

The gas input rate for propane is the same as for natural gas. See furnace rating plate for input rate. The input rate for propane is determined by manifold pressure and orifice size.

The gas valve must be set for Low Heat first and then set for High Heat on two-stage and variable-speed furnaces. Furnace gas input rate on rating plate is for installations at altitudes up to 2000 ft. (610 M).

In the U.S.A., the input rating for altitudes above 2000 ft. (610 M) must be reduced by 2 percent for each 1000 ft. (305 M) above sea level.

In Canada, the input rating must be derated by 5 percent for altitudes of 2000 ft. (610 M) to 4500 ft. (1372 M) above sea level.

The Conversion Kit Rating Plate accounts for high altitude derate.

SET GAS INPUT RATE

1. Verify SW1-2 on furnace control is turned “ON”. (See **Figure 36**)
2. Jumper R and W/W1 thermostat connections to call for heat.
3. Check manifold orifices for gas leaks when main burners ignite.
4. Adjust gas manifold pressure. (Refer to conversion kit rating plate 339268–204.
5. Remove caps that conceal adjustment screws for gas valve regulators. (See **Figure 34**)

Figure 38	Burner Flame

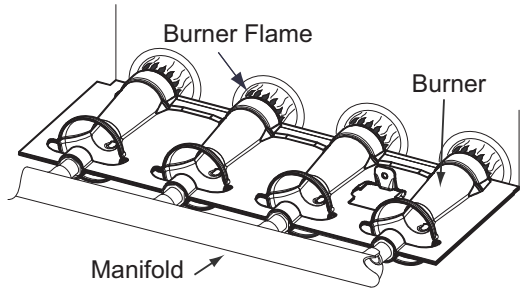

6. Adjust low−heat manifold pressure for propane gas. (See **Figure 34**)
7. Turn low−heat adjusting screw counterclockwise (out) to decrease input rate or clockwise (in) to increase input rate.

NOTE: When correct input is obtained, main burner flame should be clear blue, almost transparent (see **Figure 38**).

8. Jumper R, W/W1 and W2 on control center thermostat connections. This keeps furnace locked in high−heat operation.
9. Adjust high−heat manifold pressure for propane gas.
10. Turn high−heat adjusting screw counterclockwise (out) to decrease input rate or clockwise (in) to increase input rate.
11. Replace caps that conceal gas valve regulator adjustment screws.

NOTE: When correct input is obtained, main burner flame should be clear blue, almost transparent. (See **Figure 38**).

12. Remove jumper across R, W1, and W2 after high−heat adjustment to terminate call for heat.
13. Turn setup switch SW1-2 on furnace control to OFF position.
14. Turn furnace gas valve switch to OFF position.
15. Turn off furnace power supply.
16. Remove manometer and re-install manifold pressure tap plug.
17. Turn furnace gas valve switch to ON position.
18. Turn on furnace power supply.
19. Set room thermostat to call for heat.
20. Check pressure tap plug for gas leaks when main burners ignite.
21. Check for correct burner flame.
22. Observe unit operation through two complete heating cycles.
23. See Sequence of Operation in furnace Installation, Start−Up, and Operating Instructions.
24. Set room thermostat to desired temperature.

After making the required manifold pressure adjustments, check and adjust the furnace temperature rise per the furnace installation instructions.

CHECK LOW GAS PRESSURE SWITCH

The newly installed low gas pressure switch is a safety device used to guard against adverse burner operating characteristics that can result from low gas supply pressure. Switch opens at not less than 6.5 in. w.c. and closes at not greater than 10.2 in. w.c.

This switch also prevents operation when the propane tank level is low which can result in gas with a high concentration of impurities, additives, and residues that have settled to the bottom of the tank. Operation under these conditions can cause harm to the heat exchanger system. This normally open switch closes when gas is supplied to gas valve under normal operating pressure. The closed switch completes control circuit. Should an interruption or reduction in gas supply occur, the gas pressure at switch drops below low gas pressure switch setting, and switch opens. Any interruption in control circuit (in which low gas pressure switch is wired) quickly closes gas valve and stops gas flow to burners. When normal gas pressure is restored, the system must be electrically reset to re−establish normal heating operation.

Before leaving installation, observe unit operation through two complete heating cycles. During this time, turn gas supply to gas valve off just long enough to completely extinguish burner flame, then instantly restore full gas supply. To ensure proper low gas pressure switch operation, observe that there is no gas supply to burners until after hot surface igniter begins glowing.

LABEL APPLICATION

1. Fill in Conversion Responsibility Label 339268−205 and apply to Blower Access Door of furnace. Date, name, and address of organization making this conversion are required. (See **Figure 39**)
2. Attach Conversion Rating Plate Label 339268−204 to outer door of furnace. (See **Figure 30**)
3. Apply Gas Control Conversion Label: Use Gas Control Conversion Label 339268−202. (Do not use 339268−203, which is similar.)
4. Replace control access door, blower access door and outer door of furnace.

CHECKOUT

1. Observe unit operation through two complete heating cycles.
2. See Sequence of Operation in furnace Installation, Start−Up, and Operating Instructions.
3. Set room thermostat to desired temperature.

Figure 39	Gas Control Conversion Label

THIS FURNACE WAS CONVERTED
ON _____ TO PROPANE GAS
(DAY-MONTH-YEAR)
KIT NO.: NAHB01001LP

BY: _____

_____

_____

(Name and address of organization making this conversion), which accepts the responsibility that this conversion has been properly made.

CE GÉNÉRATEUR D'AIR CHAUD A ÉTÉ
CONVERTIE LE _____ POUR
(JOUR-MOIS-ANNÉE)
DE L'ENSEMBLE Nº.: NAHB01001LP

PAR: _____

_____

_____

(Nom et adresse de l'organisme qui a effectué la conversion), qui accepte l' entrière responsabilité de la conversion.

339268-205 REV. A